Gould Inc.
Recording Systems Division

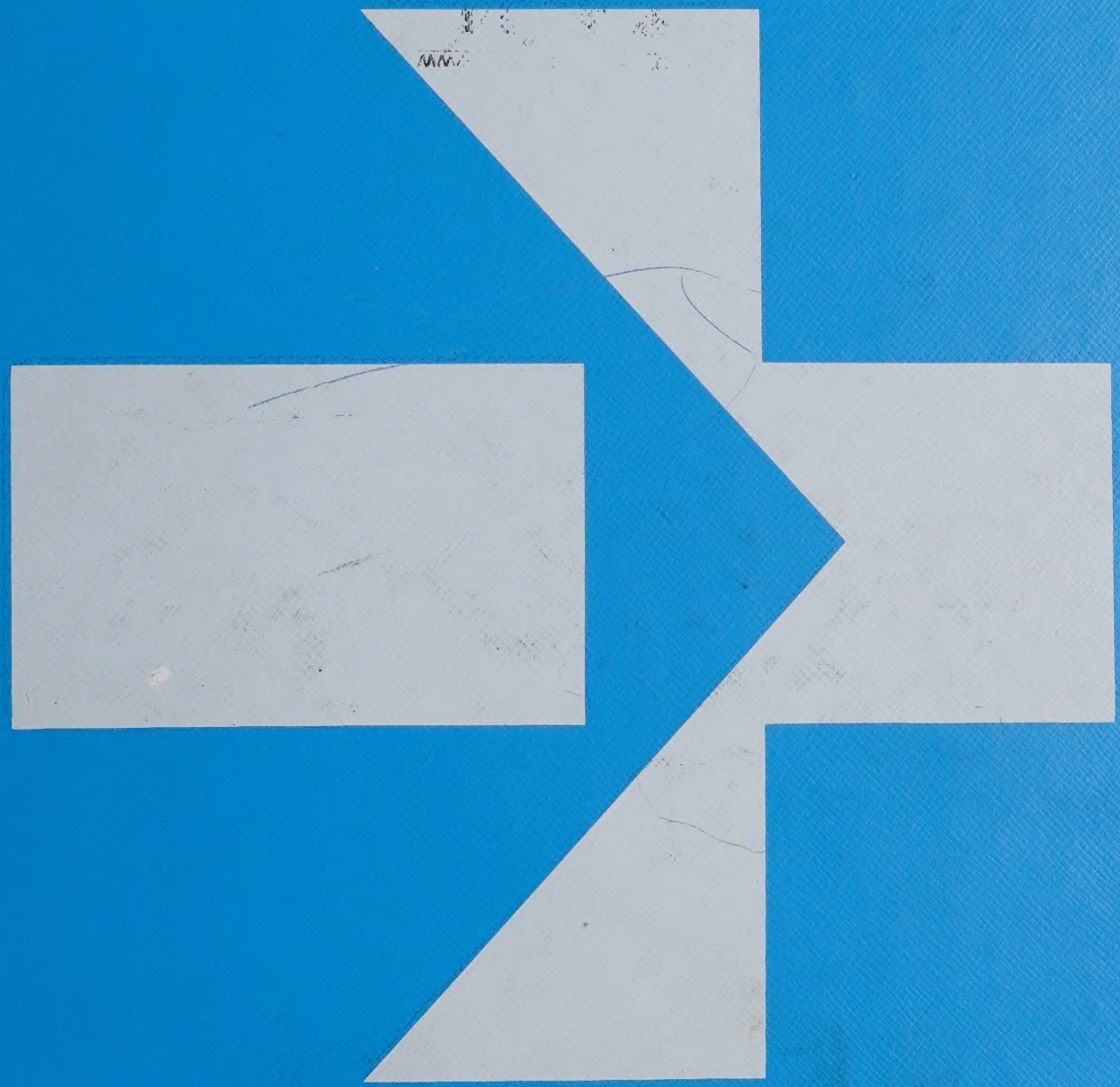

GOULD
Electronics

GOULD

Electronics & Electrical Products

MANUAL PART NUMBER
801704

1704 SERIES GOULD 200 RECORDING SYSTEMS

The information contained herein is the exclusive property of Gould Inc., except as otherwise indicated and shall not be reproduced in whole or in part without explicit written authorization from the company. The distribution of this material outside the company may occur only as authorized by the company in writing.

All information contained in this manual is the latest product information available at the time of printing. The right is reserved to make changes at any time without notice.

PRINTED JAN., 1983
COPYRIGHT 1983

Gould Inc., Instruments Division
3631 Perkins Avenue, Cleveland, Ohio 44114

1ST PRINTING
PRINTED IN U.S.A.

Digitized by the Internet Archive
in 2025

https://archive.org/details/manualsplus_05848

WARRANTY

CURRENT EQUIPMENT:

The Gould Recording Systems Division's products as shown in the Current Equipment Catalog are warranted for a period of one year from date of shipment to original purchaser. They are warranted to conform to the applicable published specifications in effect at the time of shipment, and to be free from any defects in material or manufacture when used with recommended Gould associated equipment and Gould chart paper. LIABILITY OF THE GOULD RECORDING SYSTEMS DIVISION UNDER SUCH WARRANTY IS LIMITED TO SERVICING OR REPLACING DEFECTIVE PARTS EXCEPT PENS, STYLI, FUSES AND BATTERIES AND DOES NOT INCLUDE CALIBRATION AND MINOR MAINTENANCE AS OUTLINED IN GOULD OPERATING MANUALS. (Exceptions: The thermal pen in the 110 Strip Chart Recorder is guaranteed for life. The magnetic head assemblies in the Tape Recorder are warranted for 1000 hours of use or (1) one year from date of first shipment whichever occurs first.) IN NO EVENT SHALL THE GOULD RECORDING SYSTEMS DIVISION BE LIABLE UNDER ANY CIRCUMSTANCES, FOR ANY LOSS OF PROFITS OR OTHER CONTINGENT, CONSEQUENTIAL OR SPECIAL DAMAGES. Units are to be returned transportation prepaid by the buyer. The Gould Recording Systems Division will have the right of final determination of the cause and existence of a defect under this warranty. This warranty shall not apply to any products which have been subjected to misuse, improper installation, repair, alteration, neglect, accident, inundation, fire or operation outside their published maximum ratings. THE FOREGOING WARRANTY IS EXCLUSIVE AND EXPRESSLY IN LIEU OF ALL OTHER WARRANTIES WHETHER EXPRESSED OR IMPLIED, INCLUDING ANY IMPLIED WARRANTIES OF MERCHANTABILITY OR FITNESS AND OF ANY OTHER OBLIGATION AND SHALL CONSTITUTE THE SOLE REMEDY OF THE BUYER AND SOLE LIABILITY OF THE SELLER.

Gould offers an Extended Warranty Contract for all Recording Systems Division's products manufactured in the Cleveland Perkins' facility, along with calibration traceable to NBS. Please contact the Service Center listed below for details before your warranty expires.

REPLACEMENT PARTS: Same as above -- except ninety (90) days from date of shipment.

If a defect occurs:

1. Notify your nearest RSD Service Center (see below), giving full details of the difficulty, and include the model number, type number, and serial number. On receipt of this information, service data or shipping authorization and instructions will be forwarded to you.

2. On receipt of the shipping authorization, forward the instrument prepaid to location indicated on shipping authorization.

Compliance with the above procedure will assure the earliest repair and return of your equipment.

Gould instruments are individually tested and calibrated before shipment to assure dependability and verify their accuracy. To this procedure must be added an unseen ingredient of prime importance to you: The Gould concept of continuing service. Gould responsibility for each instrument sold covers far more than its delivery. Of equal concern is the equipment's suitability for its intended purpose, its correct installation, instruction of operating personnel -- plus future servicing and maintenance. The Gould Field Service Department offers customers any or all of these services:

Field Service

- o Installation
- o Field maintenance
- o NBS Certification

Training

- o Instruction of operators
- o On-site training seminars
- o Formal Training courses

Service Contracts

- o Fixed Fee
- o Time and Material
- o Extended Warranty

Our Seal of Pride Gould Inc., Recording Systems Division, and its predecessor organizations tracing back to Charles F. Brush, have been preeminent in instrumentation development since the 1920's. Among Gould's many achievements is a series of the world's best performing, most versatile, and reliable direct writing recording systems.

Today, Gould recorders and signal conditioners are the overwhelming choice for recording analog signals in the most critical industrial, scientific, and biophysical measurement applications. Whether recording the faintest life signals of a patient in a hospital operating room or the most critical variables in the lab or on the production line, you can depend on the accuracy, faithfulness, clarity, and permanence of the traces made by a Gould recorder.

Innovative design, coupled with highest quality, are hallmarks of all Gould products.

The Field Service Engineer Gould field service engineers provide on-the-spot assistance whenever and wherever it is required. While every field service engineer is the product of intensive and thorough factory training, you will find that his greatest strength evolves from field experience and his knowledge of your objectives. He is aware of your problems, is willing and able to assist you in their solution, and is backed by the nation's most experienced organization in recording instrumentation.

Our field service engineers and technicians are daily engaged in the installation, testing, maintenance, repair and inspection of Gould recording systems all over the country. They can provide you with any information about our instruments you may require; if not, they will find the answer to your problem.

Overhaul and Repair Because we service only our own products, our customers can feel confident of prompt, effective results when they turn to Gould Factory Service Centers.

The repair service these centers provide is of particular appeal to those companies that do not operate an instruments repair facility of their own. By designating the nearest Gould Service Center as its maintenance depot, a Gould-equipped company is assured the best chance for continuity of recording instrumentation.

Many companies with their own repair facilities find it more convenient and more truly economical to have their Gould equipment repaired by service contract with the closest Service Center. In addition to enjoying fast turn-around, these companies are spared the expense of carrying an inventory of recorder parts, accessories, and supplies.

Calibration and Certification A small, quiet room in the Standards and Calibration Section at the Gould plant in Cleveland contains precision reference standards just one step removed from the prime reference measurement standards of the United States – at the National Bureau of Standards in Washington. Included in this room which is temperature-controlled within one degree and has a constant relative humidity of 40%, are standards for voltage, frequency (derived from the atomic vibration of caesium), resistance, capacitance -- in fact all basic parameters of electrical measurement. The room is maintained under stabilized conditions 365 days a year.

The calibration practice of all Gould Service Centers is directly traceable to the National Bureau of Standards. We can supply complete calibration for any Gould equipment, and we can also certify to manufacturer's specifications followed by a letter of certification when required.

Training The Gould field service engineer will hold short training courses either on the job or at his facility. On-the-job training is usually a brief, informal session with the people who will actually be operating the Gould equipment.

Formal classroom training is more complete: detailed information, a thorough review of underlying theory, training devices, demonstration of problem solving and examination of students to determine their understanding and proficiency is accomplished at our Cleveland plant.

Contracts Customer companies requiring temporary or permanent service are afforded contract arrangements by which agreed-upon maintenance, repair, upgrading and calibration services are performed on a routine basis. Service contracts are now in effect with a number of customers, affording substantial savings in time and money.

Owing to the various requirements of each customer, we do not reproduce here a standard, boilerplate agreement -- which might contain too much or too little. Instead, we tailor each contract to a particular customer's needs. This practice has singlehandedly produced substantial savings in time and money for others; and it can do the same for you.

An extended warranty is available at the point of sale allowing a regulated budget for the first two years of ownership. You may take advantage of this warranty within the first year of ownership at a percentage of the current listed price.

1200

3900

FENMOTOR

891-9

SERVICE CENTERS

ATLANTA
RECORDING SYSTEMS DIVISION
1710 Wilwat Drive
Suite D
Norcross, Georgia 30093
Phone (404) 441-5556

BOSTON
RECORDING SYSTEMS DIVISION
129 Middlesex Turnpike
Burlington, Massachusetts 01803
Phone: (617) 272-0750

BAY AREA (CA)
RECORDING SYSTEMS DIVISION
25936 Eden Landing Road
Hayward, CA 94545
Phone: (415) 887-1300

CHICAGO
RECORDING SYSTEMS DIVISION
1550 East Higgins Road
Suite 122
Elk Grove Village, Illinois 60007
Phone: (312) 640-4380

CLEVELAND
RECORDING SYSTEMS DIVISION
3631 Perkins Avenue
Cleveland, Ohio 44114
Phone: (216) 361-3315

DAYTON
RECORDING SYSTEMS DIVISION
4668 Gateway Circle
Kettering, Ohio 45440
Phone: (513) 433-9586

DENVER
RECORDING SYSTEMS DIVISION
1500 West Hampden Avenue
Unit 1C
Englewood, Colorado 80110
Phone: (303) 781-4473

DETROIT
RECORDING SYSTEMS DIVISION
32307 Mally Road
Madison Hts., Michigan 48071
Phone: (313) 588-4024

HOUSTON
RECORDING SYSTEMS DIVISION
10500 Northwest Freeway
Houston, Texas 77092
Phone: (713) 680-1121

LANHAM, MD
RECORDING SYSTEMS DIVISION
6301 Ivy Lane Suite 106
Greenbelt, Maryland 20770
Phone: (301) 345-0050

LOS ANGELES
RECORDING SYSTEMS DIVISION
16310 Arthur Street
Cerritos, California 90701
Phone: (213) 404-1919

ORLANDO
RECORDING SYSTEMS DIVISION
772 Northlake Avenue
Altamonte Springs, Florida 32701
Phone (305) 830-0695

PHILADELPHIA
RECORDING SYSTEMS DIVISION
1 Great Valley Parkway East Suite 6
Great Valley Corporate Center
Malvern, Pennsylvania 19355
Phone: (215) 647-2214

PITTSBURGH
RECORDING SYSTEMS DIVISION
Campbells Run Road
Parkway West
Pittsburgh, Pennsylvania 15205
Phone: (412) 923-2160

SADDLEBROOK
RECORDING SYSTEMS DIVISION
74 Kenney Place
Saddle Brook, New Jersey 07662
Phone: (201) 845-0220

SEATTLE
RECORDING SYSTEMS DIVISION
The Commons Bldg. Suite C-155
1200 112th Avenue NE
Bellevue, Washington 98004
Phone: (206) 453-8100

TORONTO
ALLAN CRAWFORD ASSOC., LTD
6503 Northam Drive
Mississauga, Ontario, Canada
Phone: 678-1500

EUROPE

GOULD RECORDING SYSTEMS S.A.F.
57 rue St. Sauveur 91160
Ballainvilliers, France
Phone: 909-10-67

GOULD DESIGN & TEST SYSTEMS
Roebuck Road
Hainault, Essex, England
Phone: 01-500-1000

GOULD DESIGN & TEST SYSTEMS
Dieselstrasse 5-7
D-6453 Seligenstadt,
West Germany
Phone: 06182-3107

SYSTEM CONFIGURATION

This solid state Mark 200 System, Model _____, incorporates the components that are noted in the list that follows.

QTY	COMPONENT AND MODEL NUMBER
_____	Preamplifier, Model _____
_____	Preamplifier, Model _____
_____	Preamplifier, Model _____
_____	Preamplifier Cage, Model 11-1202- _____
_____	Oscillograph, Model _____
_____	System Power Panel, Model 11-1603-12 _____
_____	System Power Panel, Model 11-1603-12813 _____
_____	Main Connector Panel, Model 11-1601-11 _____
_____	Internal Chart Take-Up Model 11-2231-01 _____
_____	External Chart Take-Up, Model _____
_____	Drive Amplifier, P/N 886220 _____
_____	Amplifier Calibration Unit, Model _____
_____	Event Marker Amplifier Assy, Model _____
_____	Event Marker Kit, Model 11-2221-02 _____
_____	_____
_____	_____
_____	_____
_____	_____

XXXX-1704-XXX

- 1 & 2 use 11-1603-12 & 11-1601-11 Main and Power Panels
- 4 & 5 use 11-1603-12813 & 11-1601-11 Main and Power Panels
- 80mm penmotors use one drive amp/channel
- 40mm penmotors use one drive amp/channel
- 8 Multimarker event penmotor use 13-5281-02 Multimarker amplifier

TABLE OF CONTENTS

SECTION	TITLE	PAGE
I	GENERAL INFORMATION	
1.1	SCOPE	1.1
1.2	SYSTEM DESCRIPTIONS	1.1
1.3	SYSTEM MODEL NUMBERING	1.5
1.4	SPECIFICATIONS	1.6
1.5	SUPPLIES & ACCESSORIES	1.9
II	INSTALLATION	
2.1	SCOPE	2.1
2.2	INCOMING INSPECTION	2.1
2.3	SIGNAL CONNECTIONS	2.1
2.4	OSCILLOGRAPH INSTALLATION	2.2
2.5	MAIN CONNECTOR PANEL INSTALLATION	2.8
2.6	SYSTEM POWER PANEL INSTALLATION	2.8
2.7	DRIVE AMPLIFIER FRAME INSTALLATION	2.9
2.8	INSTALLATION OF PREAMPLIFIER PANELS AND CAGES	2.12
2.9	CHART TAKE-UP INSTALLATIONS	2.12
2.10	INTERCHANNEL EVENT MARKER INSTALLATION	2.16
III	OPERATION	
3.1	GENERAL	3.1
3.2	PREAMPLIFIERS & PREAMP PANELS	3.1
3.3	OSCILLOGRAPH CONTROL DESCRIPTION	3.1
3.4	OSCILLOGRAPH OPERATION CHECK	3.5
3.5	PRELIMINARY OPERATION	3.6
3.6	CHART TAKE-UP OPERATION	3.8
3.7	TIMER SETTING	3.8
IV	THEORY OF OPERATION	
4.1	GENERAL	4.1
4.2	CONTROL TIMER	4.1
4.3	ANALOG RECORDING CHANNELS	4.2
V	DRIVE AMPLIFIER CALIBRATION	
5.1	SCOPE	5.1
5.2	TEST EQUIPMENT REQUIRED	5.1
5.3	PRELIMINARY SETUP	5.1
5.4	CALIBRATION PROCEDURE	5.1
5.5	DRIVE AMP AND CONTROL TIMER PARTS LISTS AND BOARD LAYOUTS	5.2

TABLE OF CONTENTS (continued)

SECTION		TITLE	PAGE
VI	MAINTENANCE		
	6.1	SCOPE	6.1
	6.2	CLEANING AND INSPECTION	6.1
	6.3	TOOLS AND EQUIPMENT	6.1
	6.4	LOADING OR CHANGING CHART PAPER - VERTICAL OSCILLOGRAPH	6.2
	6.5	LOADING OR CHANGING CHART PAPER (HORIZONTAL OSCILLOGRAPH)	6.3
	6.6	CHART PAPER SUPPLY INDICATOR	6.4
	6.7	INK SUPPLY	6.4
	6.8	CHART PAPER TENSION	6.5
	6.9	PRESSURE ROLLER	6.5
	6.10	PAPER CENTERING AND TRACKING	6.6
	6.11	CHART SPEED MEASUREMENT	6.7
	6.12	PEN PRESSURE MEASUREMENT	6.7
	6.13	PEN PRESSURE ADJUSTMENT	6.7
	6.14	PEN LAPPING	6.8
	6.15	PEN REPLACEMENT	6.9
	6.16	PEN CLEANING	6.10
	6.17	MAINTENANCE TIPS ON INK SYSTEM	6.10
	6.18	REPLACING PENMOTOR DRIVE BAND	6.11
	6.19	FUSE REPLACEMENT	6.11
	6.20	MULTI-CHOICE TIMER	6.12
	6.21	INKING SYSTEM REPLACEMENT - HORIZONTAL OSCILLOGRAPH	6.13
	6.22	INKING SYSTEM REPLACEMENT - VERTICAL OSCILLOGRAPH	6.16
	6.23	BLEEDING INKING SYSTEM	6.19
	6.24	CHART DRIVE ASSEMBLY REMOVAL - HORIZONTAL OSCILLOGRAPH	6.19
	6.25	INSTALLATION OF CHART DRIVE ASSEMBLY - HORIZONTAL OSCILLOGRAPH	6.20
	6.26	REMOVAL OF CHART DRIVE ASSEMBLY - VERTICAL OSCILLOGRAPH	6.21
	6.27	INSTALLATION OF CHART DRIVE ASSEMBLY	6.21
	6.28	SCOPE	6.23
	6.29	STAR DIAGRAM	6.26
VII	PARTS IDENTIFICATION		
	7.1	GENERAL	7.1
VIII	SCHEMATICS, WIRING DIAGRAMS AND INSTALLATION DRAWINGS		
	8.1	GENERAL	8.1

LIST OF ILLUSTRATIONS

FIGURE	TITLE	PAGE
1-1	GOULD 200 SYSTEM WITH VERTICAL OSCILLOGRAPH	1.1
1-2	GOULD 200 SYSTEM WITH HORIZONTAL OSCILLOGRAPH	1.1
1-3	VERTICAL OSCILLOGRAPH	1.2
1-4	HORIZONTAL OSCILLOGRAPH	1.2
1-5	MAIN CONNECTOR PANEL	1.3
1-6	SYSTEM POWER PANEL	1.3
1-7	AMPLIFIER CALIBRATION UNIT	1.4
1-8	DRIVE AMP FRAME SUB-ASSEMBLY	1.4
1-9	FREQUENCY VS. AMPLITUDE	1.6
2-1	INSTALLATION OF VERTICAL OSCILLOGRAPH	2.3
2-2	INSTALLATION OF VERTICAL OSCILLOGRAPH	2.3
2-3	INSTALLATION OF VERTICAL OSCILLOGRAPH	2.4
2-4	INSTALLATION OF VERTICAL OSCILLOGRAPH	2.4
2-5	OUTLINE DIMENSIONS - VERTICAL OSCILLOGRAPH	2.5
2-6	INSTALLATION OF HORIZONTAL OSCILLOGRAPH	2.6
2-7	INSTALLATION OF HORIZONTAL OSCILLOGRAPH	2.7
2-8	OUTLINE DIMENSIONS - HORIZONTAL OSCILLOGRAPH	2.7
2-9	INSTALLATION OF MAIN CONNECTOR PANEL	2.8
2-10	INSTALLATION OF SYSTEM POWER PANEL	2.8
2-11	INSTALLATION OF SYSTEM POWER PANEL	2.9
2-12	DRIVE AMP FRAME INSTALLATION	2.10
2-13	DRIVE AMP FRAME INSTALLATION	2.11
2-14	INSTALLATION OF INTERNAL CHART TAKEUP MODEL 11-2231-01	2.13
2-15	INSTALLATION OF TAKEUP KIT MODELS 11-2402-53 and 11-2402-54	2.15
2-16	INSTALLATION OF TAKEUP MODEL 11-2402-52	2.15
3-1	VERTICAL OSCILLOGRAPH FRONT PANEL CONTROLS	3.1
3-2	HORIZONTAL OSCILLOGRAPH CONTROL PANEL CONTROLS	3.3
4-1	BASIC RECORDER BLOCK DIAGRAM	4.1
4-2	ANALOG CHANNEL BLOCK DIAGRAM	4.3
5-1	CALIBRATION CONTROLS	5.1
6-1	LOADING CHART PAPER	6.2
6-2	VERTICAL OSCILLOGRAPH LEFT SIDE	6.2
6-3	HORIZONTAL OSCILLOGRAPH RIGHT SIDE	6.3
6-4	VERTICAL OSCILLOGRAPH INK MASTER CYLINDER	6.4
6-5	HORIZONTAL OSCILLOGRAPH INTERIOR	6.5
6-6	VERTICAL OSCILLOGRAPH PRESSURE ROLLER ADJUSTMENT	6.5
6-7	HORIZONTAL OSCILLOGRAPH PRESSURE ROLLER ADJUSTMENT	6.6
6-8	PEN PRESSURE MEASUREMENT	6.7
6-9	PEN PRESSURE ADJUSTMENT	6.8
6-10	PEN LAPPING	6.8
6-11	PEN REPLACEMENT	6.9
6-12	HYPODERMIC NEEDLE MODIFICATION	6.10
6-13	PENMOTOR DRIVE BAND REPLACEMENT	6.12
6-14	MANIFOLD ASSEMBLY	6.13

LIST OF ILLUSTRATIONS (continued)

FIGURE	TITLE	PAGE
7-1	CABINET ASSEMBLY, VERTICAL SYSTEM	7.4
7-2	CABINET ASSEMBLY, SLOPE FRONT SYSTEM	7.9
7-3	CABINET ASSEMBLY, LOW BOY SYSTEM	7.12
7-4	OSCILLOGRAPH ASSEMBLY	7.14
7-5	CHASSIS ASSEMBLY, MODULAR OSCILLOGRAPH, VERTICAL	7.20
7-6	BRACKET ASSEMBLY, PAPER DRAG	7.22
7-7	HARNESS ASSEMBLY COMPLETE	7.24
7-8	MANIFOLD ASSEMBLY COMPLETE	7.26
7-9	DRIVE ASSEMBLY	7.28
7-10	SHAFT ASSEMBLY, SUPPLY ROLL	7.30
7-11	PAPER MAGAZINE ASSEMBLY	7.35
7-12	BAR ASSEMBLY, WRITING	7.37
7-13	OSCILLOGRAPH ASSEMBLY, HORIZONTAL	7.41
7-14	RECORDER SUBASSEMBLY	7.49
7-15	SHAFT ASSEMBLY, SUPPLY ROLL	7.52
7-16	HARNESS ASSEMBLY COMPLETE	7.55
7-17	MANIFOLD ASSEMBLY (HORIZONTAL OSCILLOGRAPH)	7.57
7-18	BRACKET ASSEMBLY, ELECTRICAL	7.60
7-19	SYSTEM POWER PANEL ASSEMBLY	7.62
7-20	MAIN CONNECTOR PANEL & CABLE ASSEMBLY	7.65
7-21	PANEL ASSEMBLY PEN POSITION	7.67
7-22	FRAME ASSEMBLY, DRIVE AMPLIFIER	7.69
7-23	FRAME SUBASSEMBLY, DRIVE AMPLIFIER	7.72
7-24	INK SUPPLY ASSEMBLY	7.74
7-25	TIMER ASSEMBLY, INTERNAL, MULTI-CHOICE	7.76
7-26	DRIVE AMPLIFIER BOARD	7.80
7-27	CONTROL TIMER BOARD	7.82
7-28	HORIZONTAL RACK MOUNT	7.85

LIST OF TABLES

TABLE	TITLE	PAGE
1-1	1704 SERIES MODEL NUMBERING SYSTEM	1.5
3-1	SWITCH SETTINGS VS. TIMER REPETITION RATE FOR VARIOUS POWER LINE FREQUENCIES	3.9
4-1	FUSE VS. CIRCUIT PROTECTED	4.2
6-1	MAINTENANCE TOOLS AND EQUIPMENT	6.1
7-1	FUSE TABLE - CONTROL TIMER BOARD 886327	7.83

SECTION I

GENERAL INFORMATION

1.1 SCOPE

This manual is written for operators of Gould 200 1704 Series Recording Systems. The manual contains System Descriptions, Specifications, Installation Procedures, Operator Instructions, Fault Location Tables, Drive Amp Calibration and Routine Maintenance.

1.2 SYSTEM DESCRIPTIONS

a. General

The 1704 Series is the newest generation of Gould 200 Systems combining an effective pen position feedback system, high torque penmotors, rectilinear pen motion linkage and pressurized fluid writing. Modular design allows the Gould 200 to be tailored to any recording requirement. Both vertical and horizontal read-out oscillographs are available as shown below, Figures 1-1 and 1-2.

Each recorder has space for from four to eight writing modules which may all be alike or intermixed. There are two basic modules and they are a 40-millimeter analog module with a full scale response of 60 Hertz or an 80 millimeter module with a full scale response of 30 Hertz. Each module consists of its own drive amplifier, pen and penmotor. There are four standard writing module configurations: Eight 40-mm channels, one 80-mm and six 40-mm channels, two 80-mm and four 40-mm channels, or four 80-mm channels. Event markers on the left and right margins are standard.

bi 2174

FIGURE 1-1 GOULD 200 SYSTEM WITH VERTICAL OSCILLOGRAPH

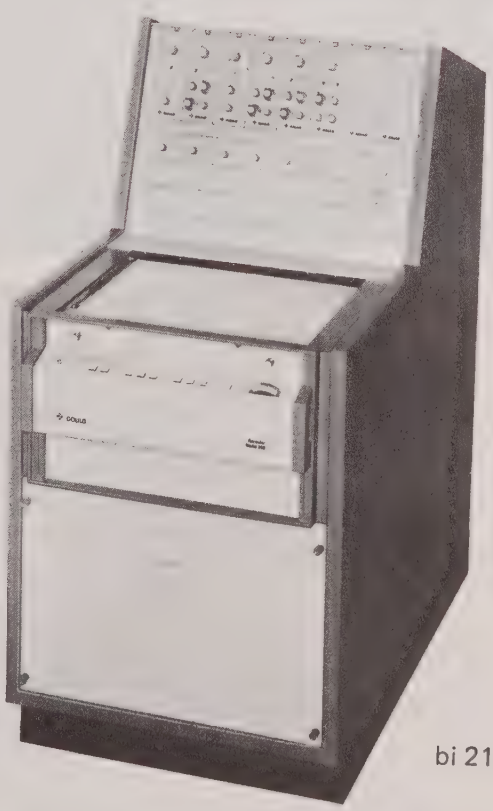

bi 2175

FIGURE 1-2 GOULD 200 SYSTEM WITH HORIZONTAL OSCILLOGRAPH

b. Vertical Oscillograph

The Gould Multi-Channel Oscillograph, Model 2607-71 (Fig. 1-3) provides a new concept in versatility. Coupled with appropriate Gould components the oscillograph can be a part of four individual systems —— either all alike, or combined in any of a number of standard configurations. (See Para. 1.4 System Model Numbering.)

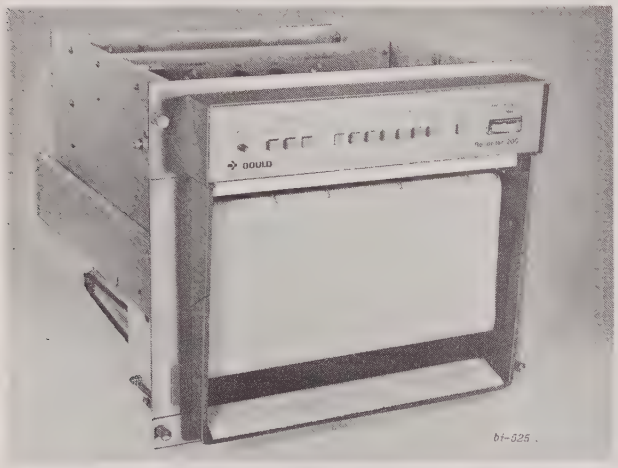

FIGURE 1-3 VERTICAL OSCILLOGRAPH

The writing system employs pressurized ink, assuring uniform, clear, rectilinear traces on low-cost rectangular-coordinate, graduated chart paper. Chart is delivered externally; or may be stored within the oscillograph on an easily accessible, optional, internal chart take-up.

Twelve chart speeds, from 0.05 millimeters to 200 millimeters per second, are selected by illuminated pushbuttons and may be changed instantly without loss of data. Two standard three-position event markers may be operated from external sources, or from an internal one-second, ten-second, and optional auxiliary timer.

The flush-mounted, vertical oscillograph features a highly visible illuminated readout surface and is designed throughout for convenience in use, easy chart paper loading, and functional versatility. The unit, occupying 15-3/4 inches of panel space is slide mounted and can be withdrawn to any point for ready access to event switches, fuses, and ink indicator. Paper supply drawer may be pulled out independently for chart loading without disturbing pens. When paper supply drawer is open, ink flow is stopped and pressure removed, preventing leakage from pens. Internal or external chart take-up is optional.

c. Horizontal Oscillograph

The horizontal oscillograph Model 2607-61 (Fig. 1-4) incorporates the same basic design features of the vertical model, but displays its data on a horizontal surface.

It is also a pull-out oscillograph and may be mounted at convenient desk height for easy annotation, ideal for computer read-out. Pull-out handles are fitted with spring loaded latches which hold the oscillograph in any position.

Unit may be pulled out to full depth for servicing. The chart speed and control mode pushbuttons plus paper supply indicator are mounted on sloped front panel for easy visibility. Timer-event marker selector switches are also readily available on front panel. External chart take-up is optional.

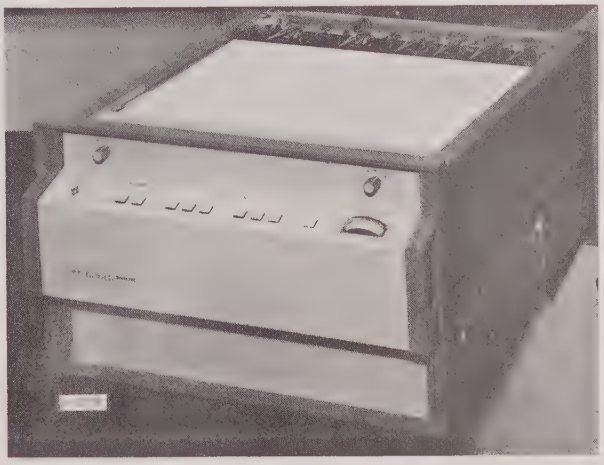

FIGURE 1-4 HORIZONTAL OSCILLOGRAPH

d. Main Connector Panel

The main connector panel Model 11-1601-11 (Fig. 1-5) is used to interconnect oscillograph and drive amplifier frame to main power source thru master power switch. The connectors and terminal boards on the panel provide a convenient location for the internal connections from the oscillograph, such as the event markers, operating voltages, limit contacts and remote control circuits. The internal connections from the preamplifiers such as coaxial cable inputs, mode inputs, and reference voltages, are also brought out to terminals on the main connector panel.

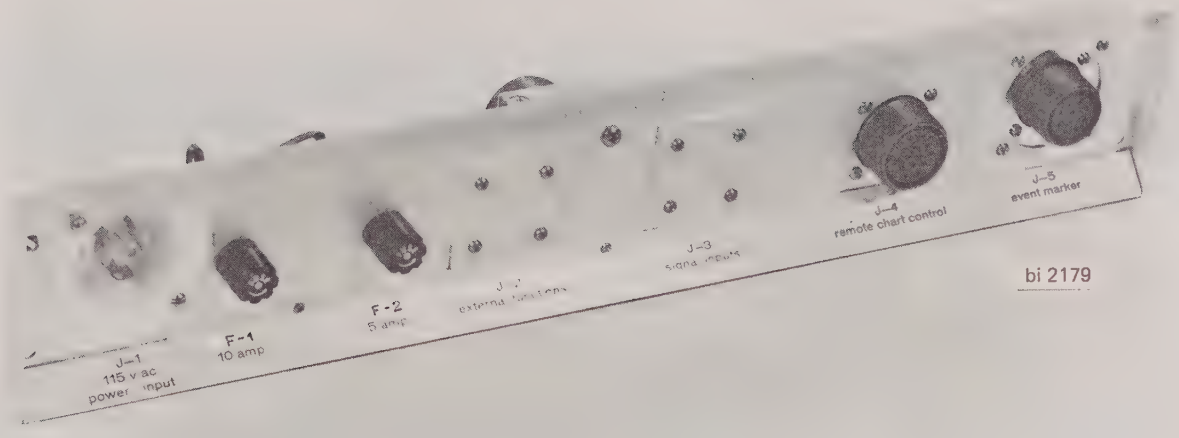

FIGURE 1-5 MAIN CONNECTOR PANEL

e. System Power Panel and Amplifier Calibration Unit

The system power panel Model 11-1603-12 (Fig. 1-6 is mounted on the front of the system cabinet and provides a convenient location of the main power switch. The power switch is a pushbutton ON–OFF switch which controls power to the entire system through the Main Connector Panel. The switch is illuminated when power is on to the system. There is a convenience outlet on some systems which is also mounted on the panel. The outlet is three-pronges and grounded for use with electrical devices requiring 115 volts 60 cps. The outlet is not controlled by the power switch. It is fused for 5 amperes maximum.

The amplifier calibration unit Model 0000-5403-21 (Fig. 1-7) was designed as an optional component to be used with the 4600 series preamplifiers to provide a precision reference source. The unit completely duplicates the function of the system power panel, which is removed when calibration unit is used, and provides for individual calibration of each drive amplifier channel. The unit is normally front panel mounted and located above vertical or horizontal oscillograph. It derives its power from the main connector panel and is interconnected by cable to the relay assembly.

The relay assembly portion of this unit mounts to the rear of the equipment rack. Power to energize the relay is supplied by amplifier calibration unit portion through a cable connected between preamplifier signal outputs and drive amplifier signal inputs.

FIGURE 1-6 SYSTEM POWER PANEL

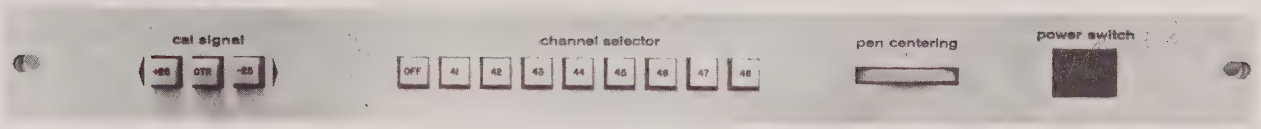

FIGURE 1-7 AMPLIFIER CALIBRATION UNIT

f. Drive Amplifier Frame Assy

The drive amp frame assembly consists of a front panel, rack mounting slides and a drive amp sub-assembly. The sub-assembly (Fig. 1-8) consists of a power supply with associated wiring, plug-in slots for one control timer board and up to eight drive amplifier boards. The above mentioned sub-assembly parts are housed in a drive amp frame.

The drive amp frame assy is mounted below the oscillograph on the cabinet or console. Access to the drive amps comes by removing the "Drive Amplifiers" panel on the front of the cabinet.

g. Preamplifier Kits

The preamplifier kit assembly is located above the oscillograph and contains the 4600 series plug-in preamplifiers if used. Power is supplied by the drive amp frame power supply. The assembly contains receptacles for signal and power input as well as output connectors for the preamps. Three kits are available: Model 11-1202-15 for vertical configurations; Model 11-1202-19 for horizontal configurations; and Model 11-1202-22 for horizontal configuration primarily with slope-front cabinets.

FIGURE 1-8 DRIVE AMP FRAME SUB-ASSEMBLY

1.3 SYSTEM MODEL NUMBERING

The model number of the Gould 200 1704 Series Recording System designates type of oscillograph (vertical or horizontal), type of signal conditioners, style of cabinet, and penmotor configuration. Table 1-1 below, describes the 1704 Series model numbering system.

TABLE 1-1 1704 SERIES MODEL NUMBERING SYSTEM

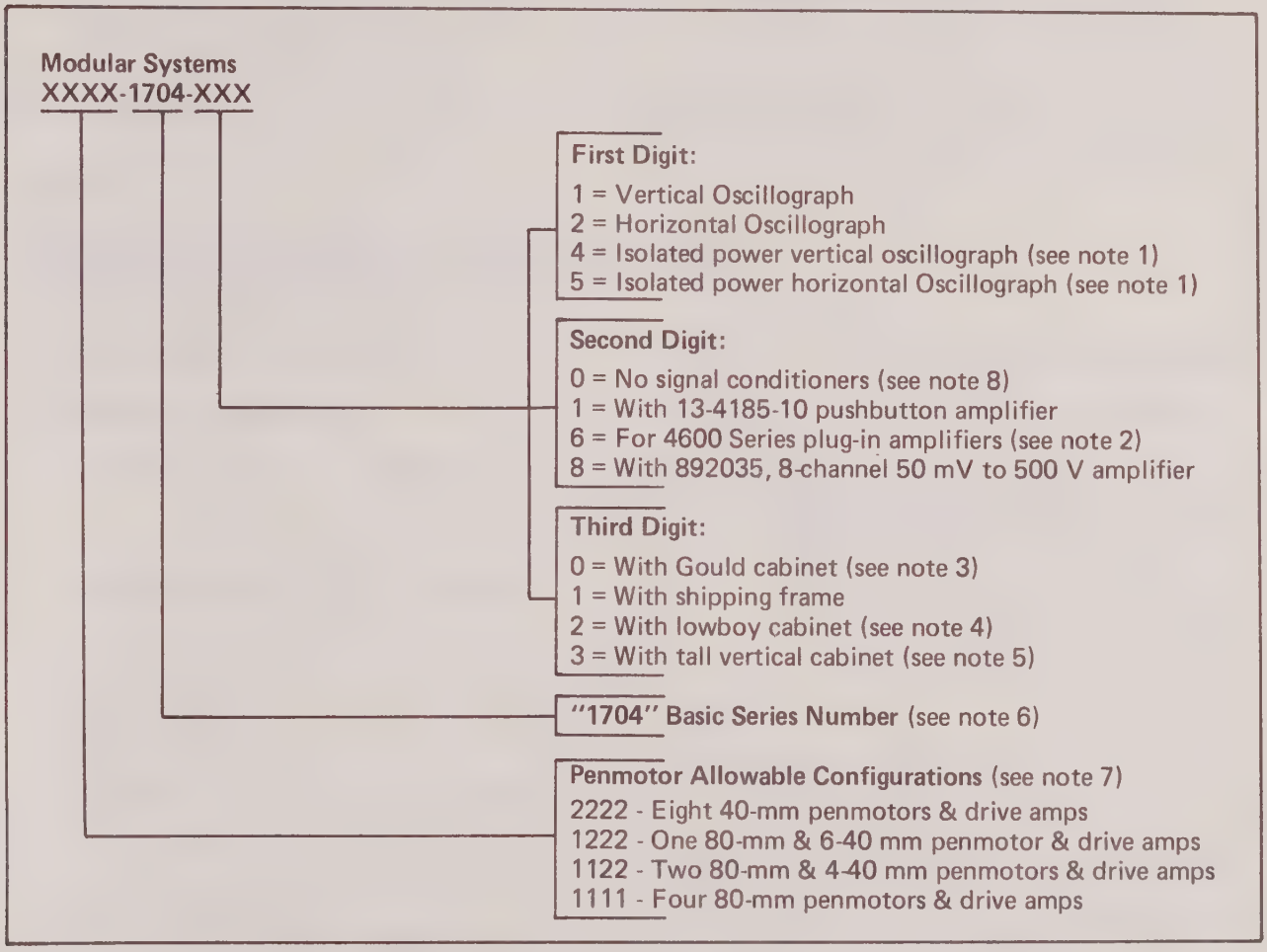

NOTES ON MODULAR SYSTEM:

1. -4XX and -5XX include 750 watt isolation transformer and low-leakage power cord (leakage current less than 30 μA at 115 Vac).
2. -X6X includes Model 11-1202-15, 4600 Series amplifier frame. (Vertical Cabinet Only.)
3. -XX0 vertical systems supplied with Model 11-1154-61 Gould vertical cabinet.
4. -XX2 horizontal oscillograph supplied with Model 11-1112-71 Gould lowboy cabinet.
5. -XX3 horizontal or vertical oscillograph supplied with Model 11-1170-62 Gould oversized base tall vertical cabinet. Must specify equipment locations from top to bottom.
6. "1704" basic system does not include Gould cabinet, drive amplifiers, penmotors, amplifier frame, or signal amplifier, chart take-up, or other accessories.
7. XXXX- each digit in the prefix stands for penmotor locations — from left to right, facing the oscillograph.
   1 = one 80-mm penmotor and drive amplifier.
   2 = two 40-mm penmotors and drive amplifiers.
8. To order systems for use with 4200 Series Preamplifiers, order XXXX-1704-X"O"X and add appropriate 4200 Series frame (11-4588-12, -13 or 14) as a separate line item. For Gould lowboy cabinets, also add 864524 panel extension.

1.4 SPECIFICATIONS

a. System

General

Weight . . . . . Approximately 375 pounds. (Less amplifiers and dependent on cabinet configuration.)

Paneling . . . . . Two-tone light and dark parchment.

Configuration . . . . . Refer to drawings for each model number in the installation section for dimensions and placement of components.

Electrical

NOTE: Complete system specifications are modified by characteristics of preamplifier used. Only basic drive system characteristics are listed below. Refer to individual preamplifier manuals.

Input Impedance (to drive amps) . . . . . 100,000 ohms ±1% single ended.

Signal Input Sensitivity . . . . . 100 millivolts per chart division full scale ±2.5 volts.

Polarity . . . . . Standard — Positive signal to drive amp. HI input causes pen to deflect left. Option — Polarity can be reversed by using inverting cable (PB792696) from drive amp to pen motor.

Pen Position Control (one per channel) . . . . . Range — ±100% of full scale (approx.) Infinitely adjustable ±5 Vdc.

D.C. Linearity . . . . . ±0.35% of full scale.

A.C. Linearity . . . . . ±0.5%

Rise Time . . . . . 10% to 90% .005 second (40mm); 10% to 90% .008 second (80mm).

Damping . . . . . Adjustable thru critical overshoot less than one division with full scale step.

Frequency Response . . . . . See Figure 1-9.

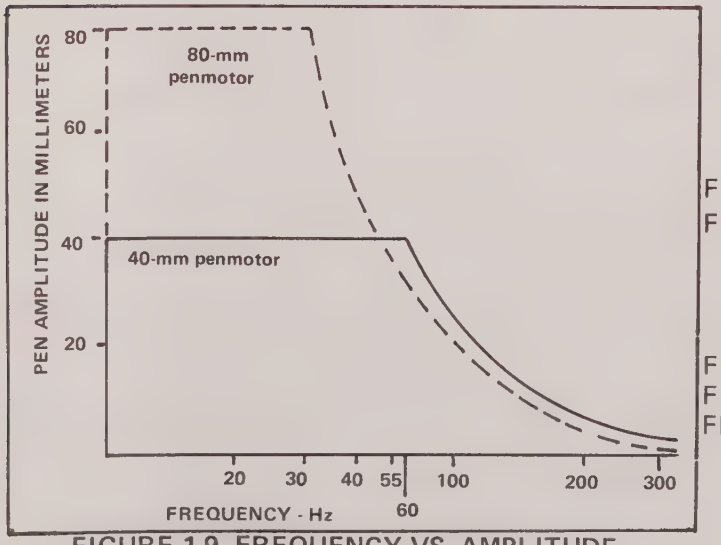

FIGURE 1-9 FREQUENCY VS. AMPLITUDE

40mm Channel

Flat dc to 60 Hz @ 50 divisions ±2% of F.S.
Flat dc to 135 Hz @ 10 divisions ±2% of F.S.

80mm Channel

Flat dc to 30 Hz @ 50 divisions ±2% of F.S.
Flat dc to 55 Hz @ 25 divisions ±2% of F.S.
Flat dc to 95 Hz @ 10 divisions ±2% of F.S.

Stability (after 30 minute warm-up)	Zero	Gain
	Time 0.1%/24 hr.	0.1%/24 hr.
	Temp 0.025%/°C.	0.05%/°C.
	Line Voltage 0.1%/10%	0.05%/10%.

Temperature Range . . . . . Operating: 0°C to +50°C. Storage: -40°C to + 70°C.

Power Input . . . . . .105 to 125 volts, 60 Hz, single phase. 700 Watts.

Power Requirements (@60 Hz) . . . . . .1. Ocillograph Chart Drive 225 Watts.
2. Max./channel including preamp 60 Watts.
3. Max. for complete system of eight channels including eight 4600 series preamps 700 Watts.

NOTE: Add approximately 100 Watts for 400 Hz system.

Input Circuit . . . . . .Single ended, isolated common to 500 Vdc.

b. Oscillograph

No. and type of channels (Analog) . . . . . Four Standard Models: eight 40mm channels; four 80mm channels; one 80mm and six 40mm channels; two 80mm and four 40mm channels.

(Event) . . . . . Two standard; R and L margins. Up to seven additional interchannel event markers may be added.

Chart Description . . . . . .50 divisions, 40mm or 80mm widths.

Trace Presentation. . . . . Rectilinear.

Writing Method . . . . . .Pressurized fluid (closed system) 2-oz fluid capacity.

Trace Width. . . . . .01 inches.

Writing Table. . . . . Vertical Unit: Chart travel down. Horizontal Unit: Chart travel horizontal.

Chart Capacity . . . . . .High contrast - 500 feet (approximately 8 hours @ 5mm/sec).

Chart Speeds . . . . . .12, electrically selected; two ranges; .05, .1, .25, 5, 1, 2mm/sec; and 5, 10, 25, 50, 100 and 200mm/sec.

Chart Speed Accuracy. . . . . .±0.25% @ nominal line frequency.

Paper Control . . . . . .Tracking error and wander less than .025 inch, 20 feet after rethreading. Either external discharge or internal chart take-up.

Interlock Light . . . . . .Warns when chart paper supply is exhausted or writing table not positioned properly.

Signal Limiters . . . . . Built-in adjustable, instant acting electronic limiters prevent pen damage from off-scale overloads.

Dimensions Vertical ..... Panel height 15-3/4 inches; width 19 inches; depth 21 inches. Overhang beyond panel is 2-1/2 inches closed, 14-1/2 inches for paper loading, 24 inches maximum (all sides extended).

Dimensions Horizontal ..... Panel height 10-1/2 inches; width 19 inches; depth 21 inches. Overhang beyond panel is 2-1/2 inches closed, 23 inches maximum (fully extended).

c. System Power Panel

Dimensions ..... Height 1-3/4 inches, Width 19 inches, Depth 2 inches.

Power Cable ..... 7 feet long.

Power Switch Rating ..... 10 amperes at 115 volts A.C.

Power Switch Illumination ..... Neon in switch indicates "Power On".

Power Input ..... Approximately 20 watts at 115 volts. A.C. power is supplied from main connector panel.

d. Amplifier Calibration Unit (Optional)

Dimensions ..... Height 1 3/4 inches, Width 19 inches, Depth 6 3/4 inches.

Power Switch Rating ..... 10 amps at 115 volts A.C. maximum.

Power Switch Illumination ..... Neon light in switch.

Calibration Signal ..... ±2.5 volts into 5 K ohms.

Stability ..... Time: ±.1%/hour; ±.2%/mo. Temp: ±.1% over temp range: Range: ±65° F to +105° F. Voltage: ±.1% over 103 volts to 128 volts line voltage variation.

Pen Position Control ..... ±3 divisions minimum (front panel).

Span Control ..... ±5% of calibration signal (accessible from rear of unit).

Zero Reference Control ..... ±.5% set at factory (mounted inside unit).

Power Input ..... Approximately 20 watts at 115 volts A.C. power is supplied from main connector panel.

Storage Temperature ..... -40° F to +185° F.

Operating Temperature ..... +32° F to 131° F.

Humidity ..... 95% at +90° F.

1.5 SUPPLIES & ACCESSORIES

a. Supplies

Chart Paper

- Eight - 40mm channels 11-2983-504
- One - 80mm and six 40mm channels 1222-2943-502
- Two - 80mm and four 40mm channels 11-2963-502
- Four - 80mm channels 11-2943-51

Analog Pen (includes ink tube) 11-2823-35

Event Marker Pen (includes ink tube) 11-2821-22

Ink, Blue, 2 oz 11-2734-02

b. Accessories

Starter Kits - Each kit contains 12 rolls of high contrast semi-perforated chart paper, gram gage, one analog pen, pen adjustment wrench and lapping paper. Kit model numbers listed below.

- Eight 40mm channels 11-6250-37
- Two 80mm, four 40mm channels 11-6250-38
- One 80mm, six 40mm channels 11-6250-39
- Four 80mm channels 11-6250-40
- Gram Gage 240601-910
- Wrench, Pen Pressure 1-120922-18
- Drive Amp Extender Card 887526
- Band Assy for 40mm Penmotor 685270
- Band Assy for 80mm Penmotor 684999
- Tube Replacement Tool 267528

Chart Take-ups

- Internal, Full Roll, Vertical Oscillograph 11-2231-01
- External, Full Roll, Horizontal Oscillograph 11-2402-53
- External, Short Run, Vertical Oscillograph 11-2402-52
- External, Short Run, Horizontal Oscillograph 11-2402-54

Event Marker Kits (Factory Installed)

- Seven channel interchannel bi-directional 11-2221-02
- Standard bi-directional 792567
- Seven channel kit w/TTL drivers 13-5581-04
- Single channel amplifier (100 K ohms input) 11-5511-00
- Single channel amplifier (2.2 K ohms input) 11-5511-01
- Tee (connects analog and event pens to manifold part) 662095

SECTION II

INSTALLATION

2.1 SCOPE

This section describes the checks and inspections that should be made upon receipt of the Recording System. This section also contains the signal connections and installation instructions for the system components. As there are many optional items and accessories which may be put into a Gould 1704 Recording system, not all connection or installation instructions may be applicable.

2.2 INCOMING INSPECTION

1. Visually inspect unit for damage that may have occurred during shipment.
2. Remove packing and tape from oscillograph.
3. Remove sheet of chart paper from under pens and load chart paper supply roll into unit. (See Chapter VI for specific instructions.)
4. Check ink supply.
5. Check for loose cable connections.
6. Be sure main power switch is in off position.
7. Attach power input cable to connector J-1 on main connector panel.
8. Attach other end of power input cable to correct power source.

NOTE: Power source to be 115 volts nominal ±10%, @60Hz. Maximum of 705 watts for complete system with eight 4600 series preamps.

9. Connect signal input cable to connector J-3 on main connector panels with 13-4185-10.

NOTE: Signal input cables are connected directly to preamplifier frame on systems with 4600 series preamplifiers and 892035 preamp panel.

10. Perform preliminary operation procedure described in the operation of this manual.

2.3 SIGNAL CONNECTIONS

All external signals are applied to the main connector panel on the rear of the unit. These connections are as follows:

J-1 Power Input

Pin A	115 volts A.C. neutral in
Pin B	115 volts A.C. hot in
Pin C	Cabinet ground

J-2 External Functions

NOTE: Used with 13-4185-10 Series preamplifier (push-button models only).

Button	Pins
A	G, C
B	I, C
C	B, C
D	F, C

J-3 Signal Input

Not used with 4600 Series Preamplifiers or the 892035 preamp panel. Refer to preamp panel 13-4185-10 schematics for signal input connections.

J-4 Remote Chart Control

Pin A	Divide by 2
Pin B	Divide by 4
Pin C	Divide by 10
Pin D	Divide by 100
Pin E	Remote 28 volts — To Remote Switch
Pin F	External run
Pin G	28 volts neutral
Pin H	Motor Ind.
Pins I thru N	No connections

J-5 Event Marker Input Signals (For units with model numbers ending in 241).

Pin A	L.H. Marker external input (Left deflection)
Pin B	L.H. Marker neutral (Left deflection)
Pin C	L.H. Marker external input (Right deflection)
Pin D	L.H. Marker neutral (Right deflection)
Pin E	R.H. Marker external input (Left deflection)
Pin F	R.H. Marker neutral (Left deflection)
Pin G	R.H. Marker neutral (Right deflection)
Pin H	R.H. Marker neutral (Right deflection)
Pin I	+28 volts hot (chart moving)
Pin J	28 volts neutral

J-701A Connector to Oscillograph

Pin A	R.H. Marker in (Right deflection)
Pin B	Divide by 2 relay
Pin C	115Vac hot in
Pin D	L.H. Marker neutral (Right deflection)
Pin E	28 volts neutral
Pin F	R.H. Marker neutral (Right deflection)
Pin G	R.H. Marker neutral (Left deflection)
Pin H	L.H. Marker neutral (Left deflection)
Pin J	Chassis ground
Pin K	Divide by 100 relay
Pin L	L.H. Marker in (Left deflection)
Pin M	Motor relay (+28vdc on chart run)
Pin N	Divide by 4 relay
Pin P	R.H. Marker in (Left deflection)
Pin R	+28vdc on remote
Pin S	External Run (short to Pin R)
Pin T	L.H. Marker neutral (Right deflection)
Pin U	Divide by 10 relay
Pin V	L.H. Marker in (Right deflection)

2.4 OSCILLOGRAPH INSTALLATION

a. General

Oscillographs in most instances are factory installed in vertical cabinets, slope front cabinets, low boy consoles or shipping frames. Installation instructions are provided here for users installing their units in existing enclosures or if reinstallation becomes necessary.

CAUTION: Recording System may weigh in excess of 375 lbs. with oscillograph being the heaviest component. Use two men when removing or installing oscillograph.

b. Vertical Oscillograph

1. Slide oscillograph into front of unit.
2. Install one spacer and four screws on each side of oscillograph (Fig. 2-1) and slide oscillograph into unit.
3. Feed penmotor cables in thru rear of oscillograph.
4. Pull oscillograph out to open position.
5. Plug penmotor cable connectors into proper penmotors.

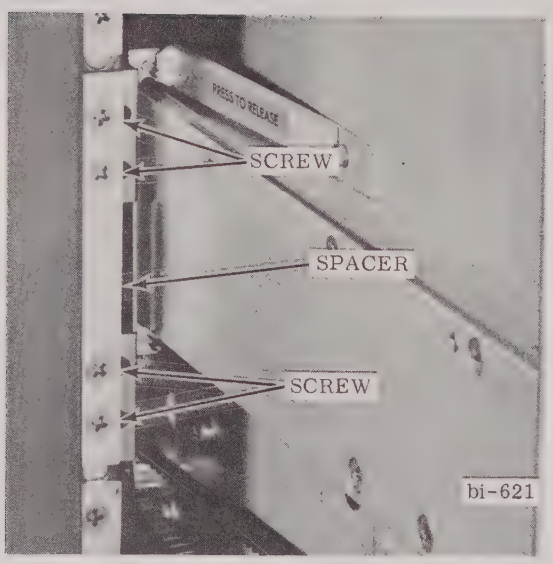

FIGURE 2-1 INSTALLATION OF VERTICAL OSCILLOGRAPH

6. Slide penmotor cables into notches on bottom of fuse panel assembly.

7. Position fuse panel assembly on mounting brackets and install four screws (Fig. 2-2).

8. Slide oscillograph into unit and tighten four captive thumbscrews.

9. Secure penmotor cables to rear of oscillograph with clamp and two screws.

10. Connect oscillograph cable connector to J-701 on rear of oscillograph (Fig. 2-3).

11. Position cover on rear of oscillograph and install seven screws and lockwashers (Fig. 2-4).

12. Outline dimensions for vertical oscillograph are shown in Figure 2-5.

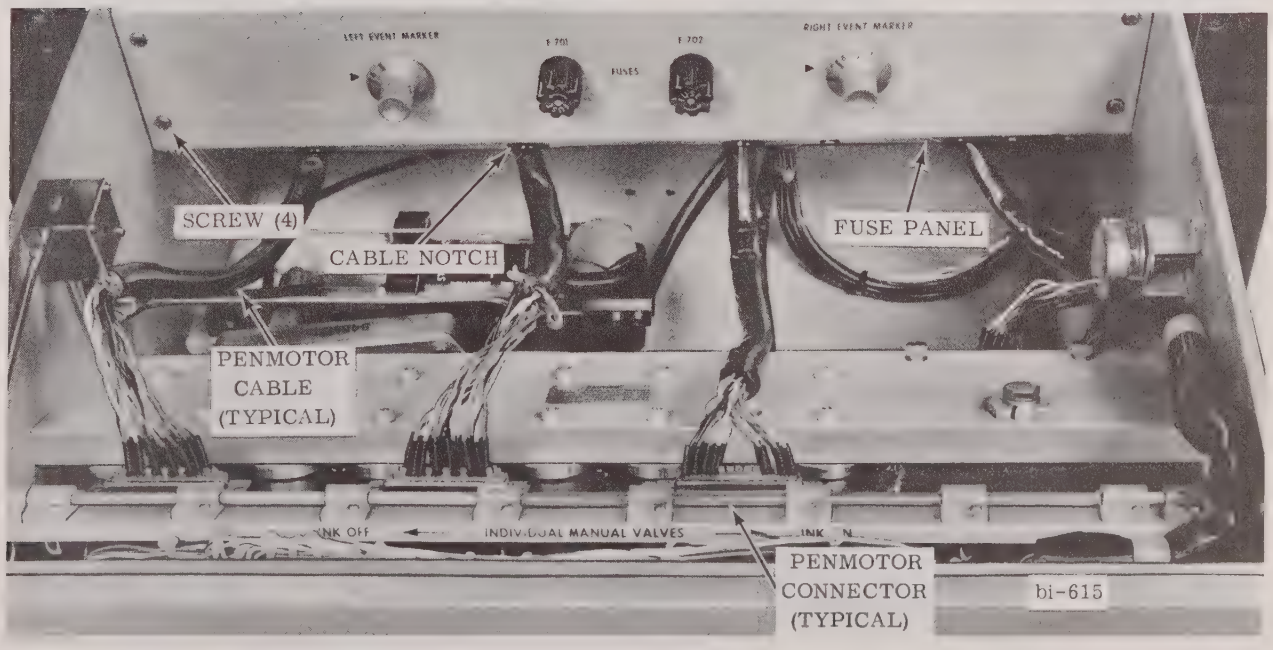

FIGURE 2-2 INSTALLATION OF VERTICAL OSCILLOGRAPH

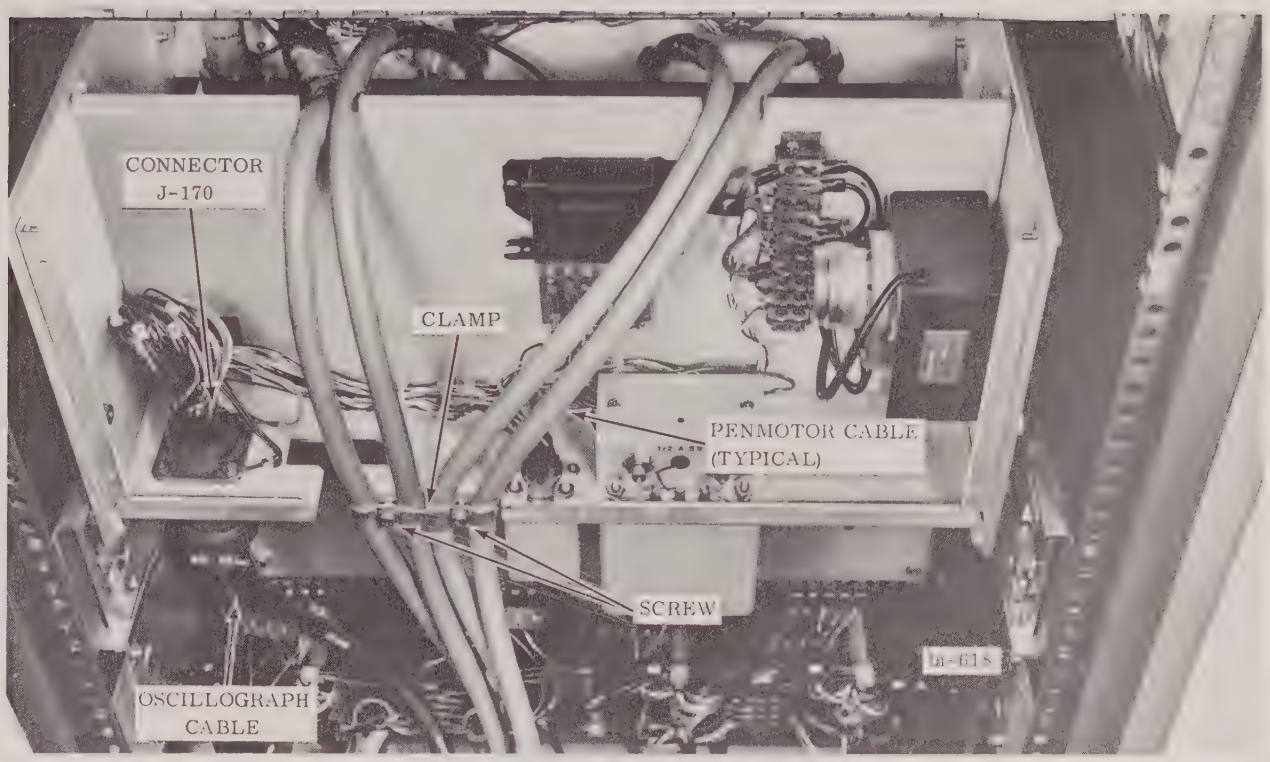

FIGURE 2-3 INSTALLATION OF VERTICAL OSCILLOGRAPH

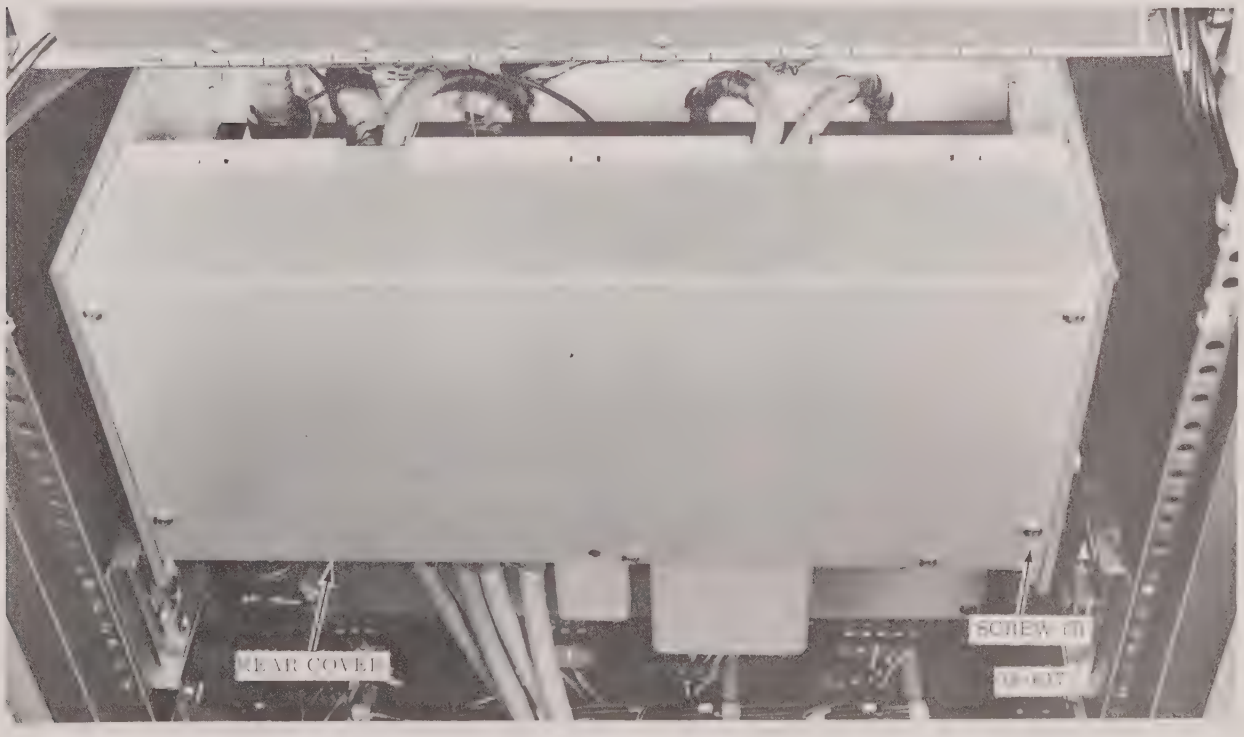

FIGURE 2-4 INSTALLATION OF VERTICAL OSCILLOGRAPH

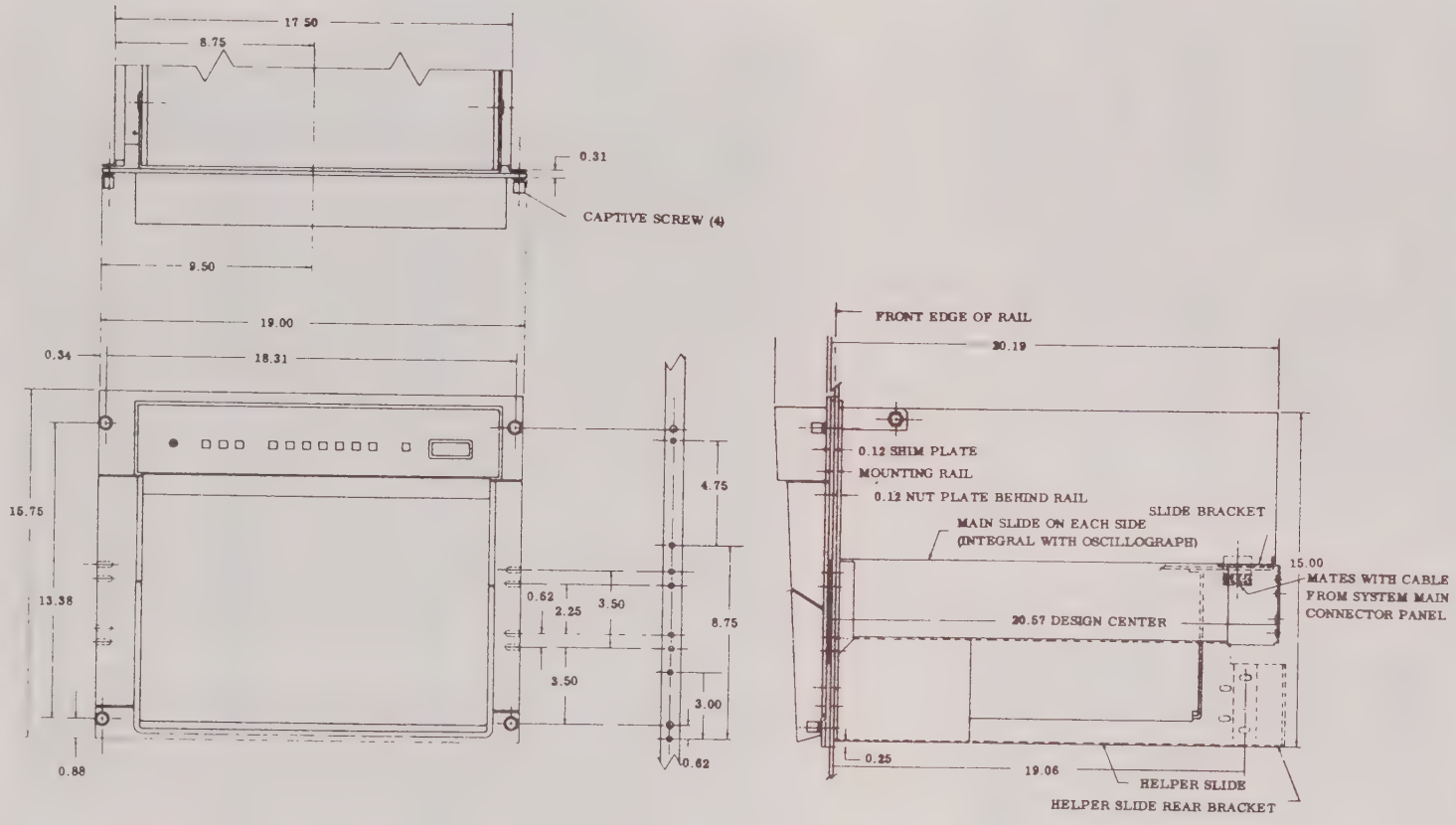

FIGURE 2-5 OUTLINE DIMENSIONS - VERTICAL OSCILLOGRAPH

b. **Horizontal Oscillograph**

1. Position oscillograph on slide brackets and install six screws, lockwashers, and flat washers from underside of oscillograph.

2. Connect rods to control panel on each side of oscillograph. Use a 1/4-inch wrench on square portion of rod and turn clockwise to tighten.

NOTE: Adjust rod so that oscillograph is free to slide when release lever is actuated.

3. Press release levers and slide oscillograph into unit.

4. Plug penmotor cable connectors into penmotors (Fig. 2-7).

5. Connect oscillograph cable connector to J-701 on rear of oscillograph (Fig. 207).

6. Secure penmotor cables to underside of rear cover support bar with two screws and clamps (Fig. 2-7).

7. Position cover plate on rear of oscillograph and install two screws and lockwashers.

8. Press release levers and pull oscillograph out to full open position.

9. Secure penmotor and oscillograph cables to underside of oscillograph with clamp and two screws.

10. Outline dimensions for horizontal oscillograph are shown in Figure 2-8.

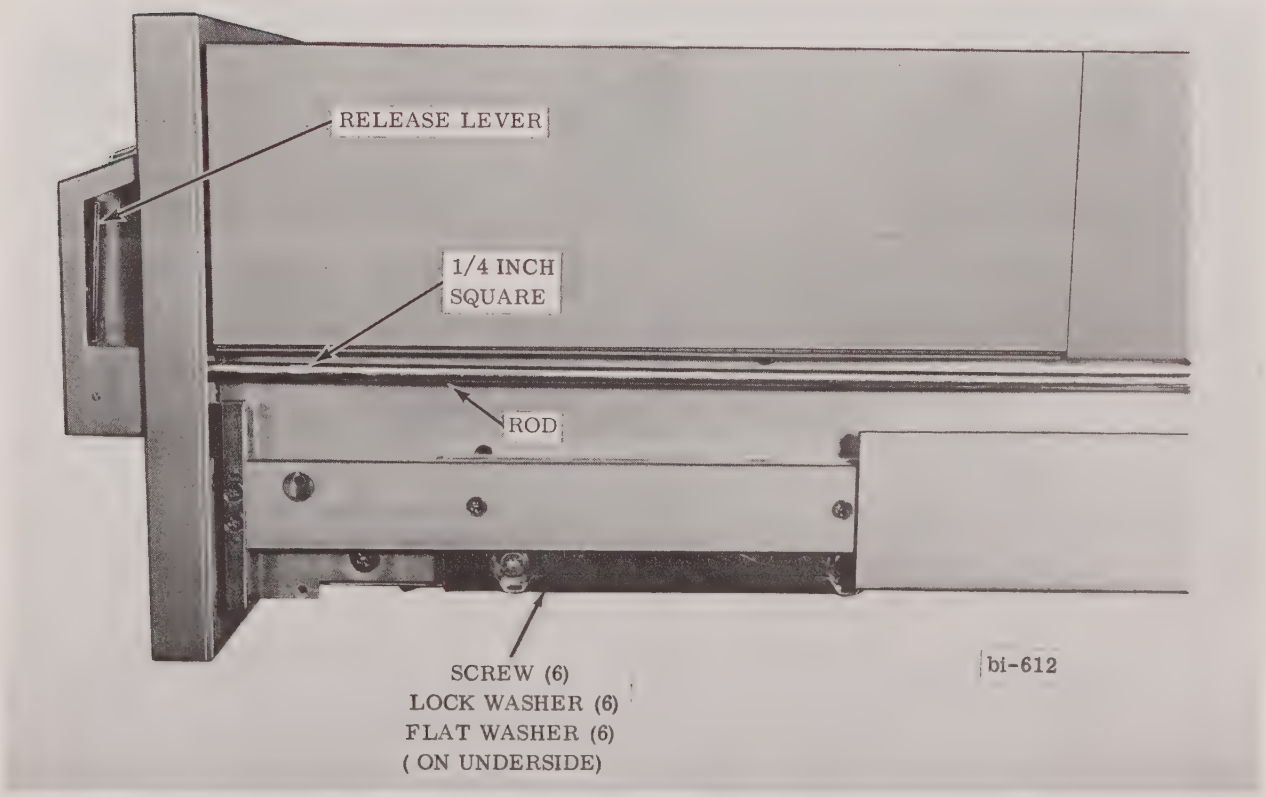

FIGURE 2-6 INSTALLATION OF HORIZONTAL OSCILLOGRAPH

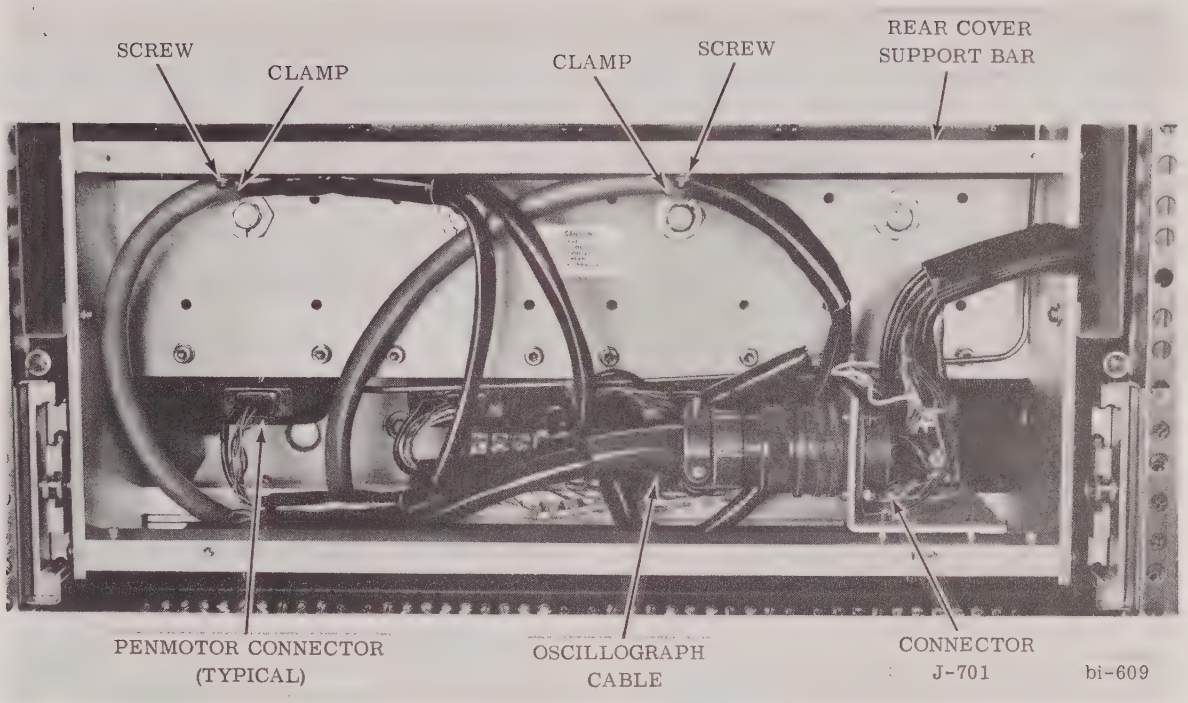

FIGURE 2-7 INSTALLATION OF HORIZONTAL OSCILLOGRAPH

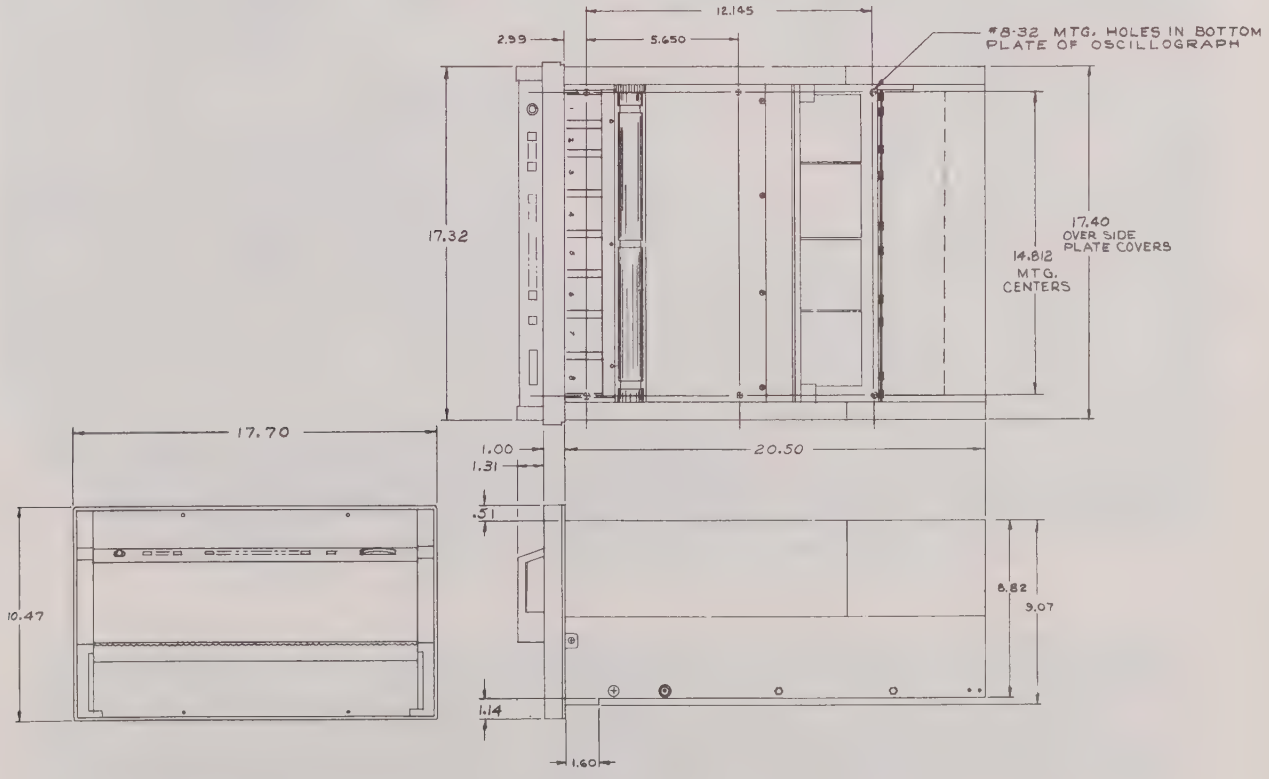

FIGURE 2-8 OUTLINE DIMENSIONS – HORIZONTAL OSCILLOGRAPH

2.5 MAIN CONNECTOR PANEL INSTALLATION

1. Position main connector panel on rear of unit (approximately 10 mounting screw holes from the bottom) and install four screws attaching panel (Fig. 2-9).

NOTE: Circuit Breakers shown in illustration have been replaced by fuses.

2. Attach ground lead to left side of unit.

3. Attach leads to terminals 1 thru 10 on terminal board TB-1 as shown on the applicable schematic (448080 or 483944) for the particular model main connector panel used. Schematics are found in Section VII of this manual.

4. Position cover on terminal board TB-1 and install two screws.

5. Connect oscillograph cable connector to J-701A on main connector panel.

6. Connect power input cable to correct power source.

2.6 SYSTEM POWER PANEL INSTALLATION

1. Slide power switch panel into unit.

NOTE: Feed cable thru opening and down to main connector panel.

2. Secure panel to front of unit with two screws (Fig. 2-10).

3. Attach cable to side of unit with clamp and screw.

4. Refer to Figure 2-11 and connect leads to terminals 1 thru 6 on terminal board TB-1 of main connector panel as shown on the applicable schematic (444120 or 483944) for the particular main connector panel used. Schematics are found in Section VII of this manual.

5. Position cover on TB-1 of main connector panel and install two screws and lockwashers.

6. Connect power input cable to correct power source.

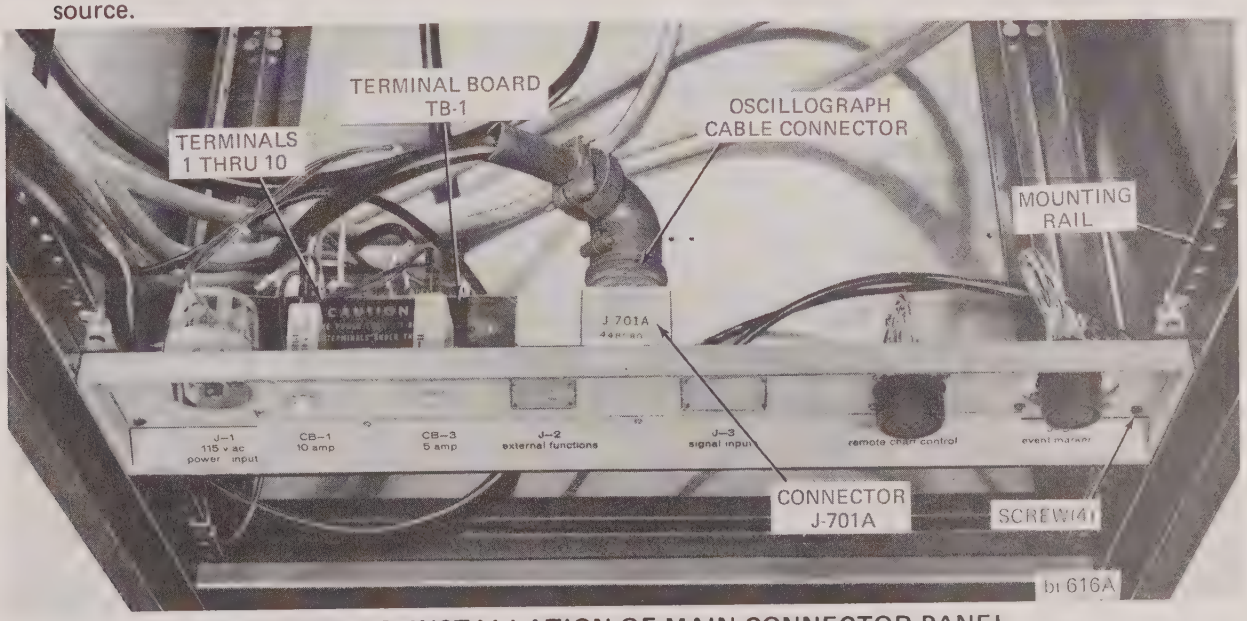

FIGURE 2-9 INSTALLATION OF MAIN CONNECTOR PANEL

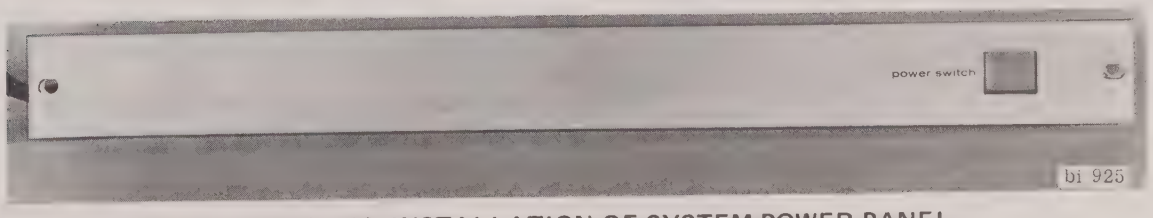

FIGURE 2-10 INSTALLATION OF SYSTEM POWER PANEL

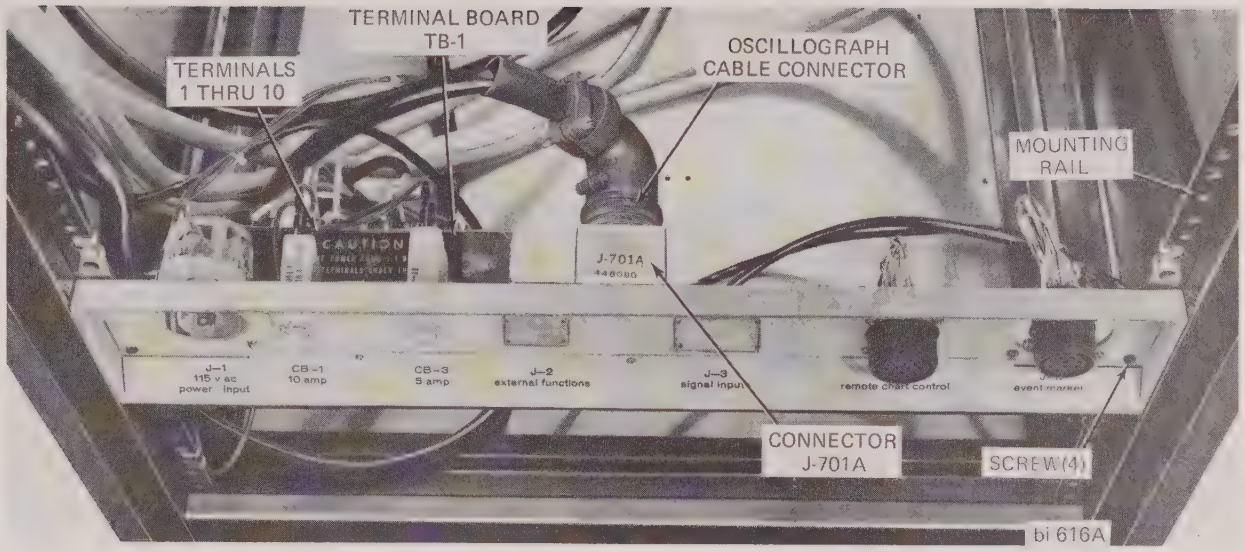

FIGURE 2-11 INSTALLATION OF SYSTEM POWER PANEL

2.7 DRIVE AMPLIFIER FRAME INSTALLATION

a. Mechanical

1. Refer to Figures 2-12 and 2-13.

2. Attach front and rear mtg brackets (items 4 & 5) to slides (item 3). Use hardware supplied with slides.

3. Install slides to cabinet rails using nut bars (item 27) at rear, and spacers and nut bars at front. Use hardware shown in Figure 2-13.

4. Pull inner tracks of slides out from front of cabinet far enough to gain access to 3 slots in each track. (See Fig. 2-13.)

5. Attach Drive Frame Subassy (item 1 or 22) to slides (Fig. 2-13) using screws, items 15 & 19.

6. Insert Drive Amp Boards and Control Timer Board into appropriate slots. Slide entire Drive Amp Frame into cabinet. Secure Drive Amp Frame to cabinet rails using screws (item 8) and nut assemblies (item 14).

7. Install Front Panel (item 2 or 16) to cabinet rails with captive thumb screws on panel and nut assemblies (item 14).

b. Electrical

1. Electrical (signal) connections are made on rear panel of Drive Amp Frame.

WARNING: REMOVE ALL POWER BEFORE MAKING ELECTRICAL CONNECTIONS.

2. Plug power cable assy connector J-101 to P-101. Connect other end of cable to TB-1 on main connector panel as follows:

   Green/yellow lead to terminal 6
   Blue lead to terminal 7
   Brown lead to terminal 8

3. Plug connector P-113 (cable from recorder) to connector J-113.

4. Plug connectors P-203 and P-204 (preamp outputs) to connectors J-103 and J-104.

5. Plug connectors P-105 thru P-112 (from penmotors) to connectors J-105 thru J-112.

6. If system employs separate pen position panel plug connector P-102 to connector J-102.

NOTE: Pen Position Panel (892693-X) is mounted below preamp cage or panel on front of cabinet with 2 screws.

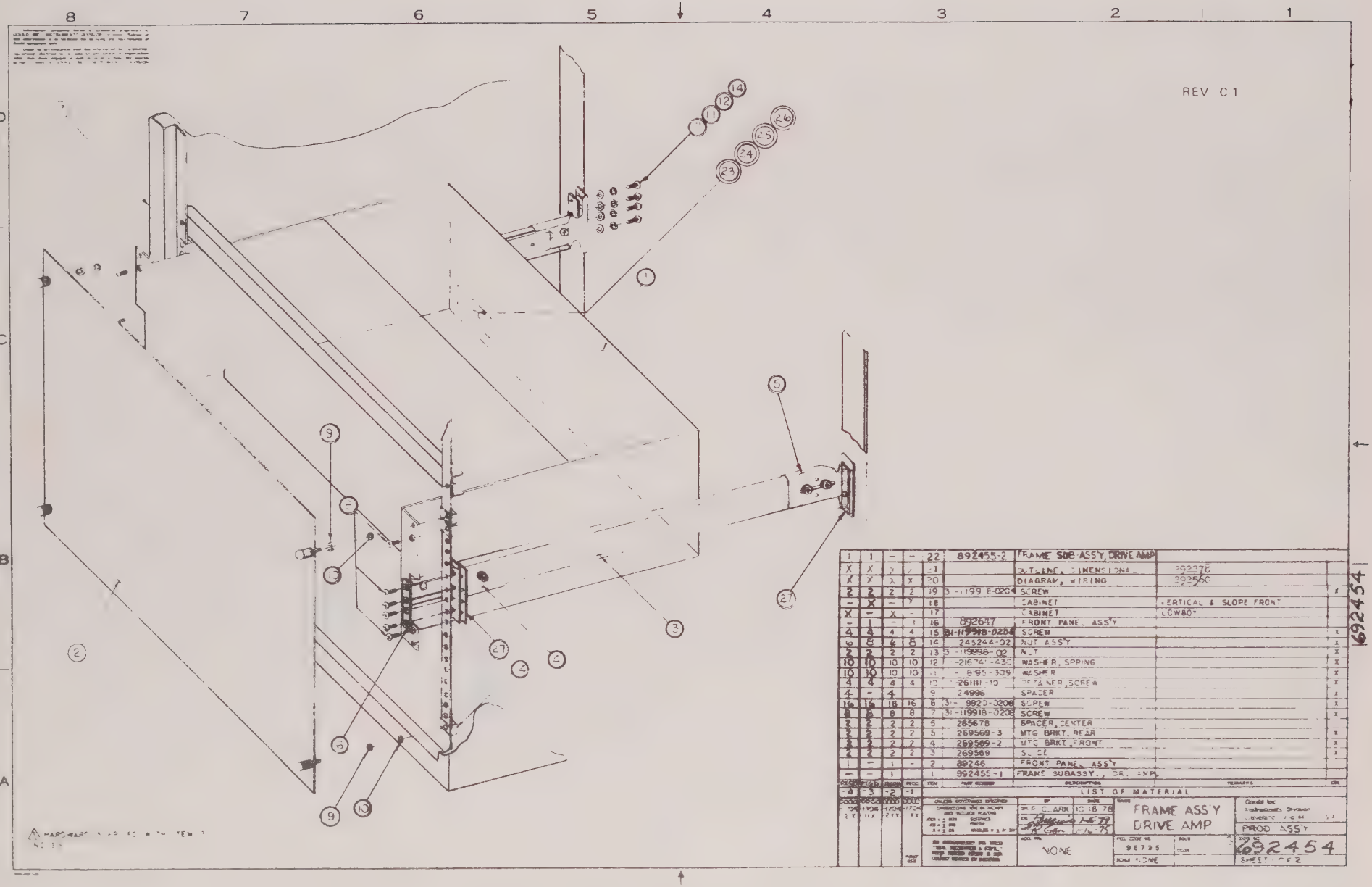

FIGURE 2-12 DRIVE AMP FRAME INSTALLATION

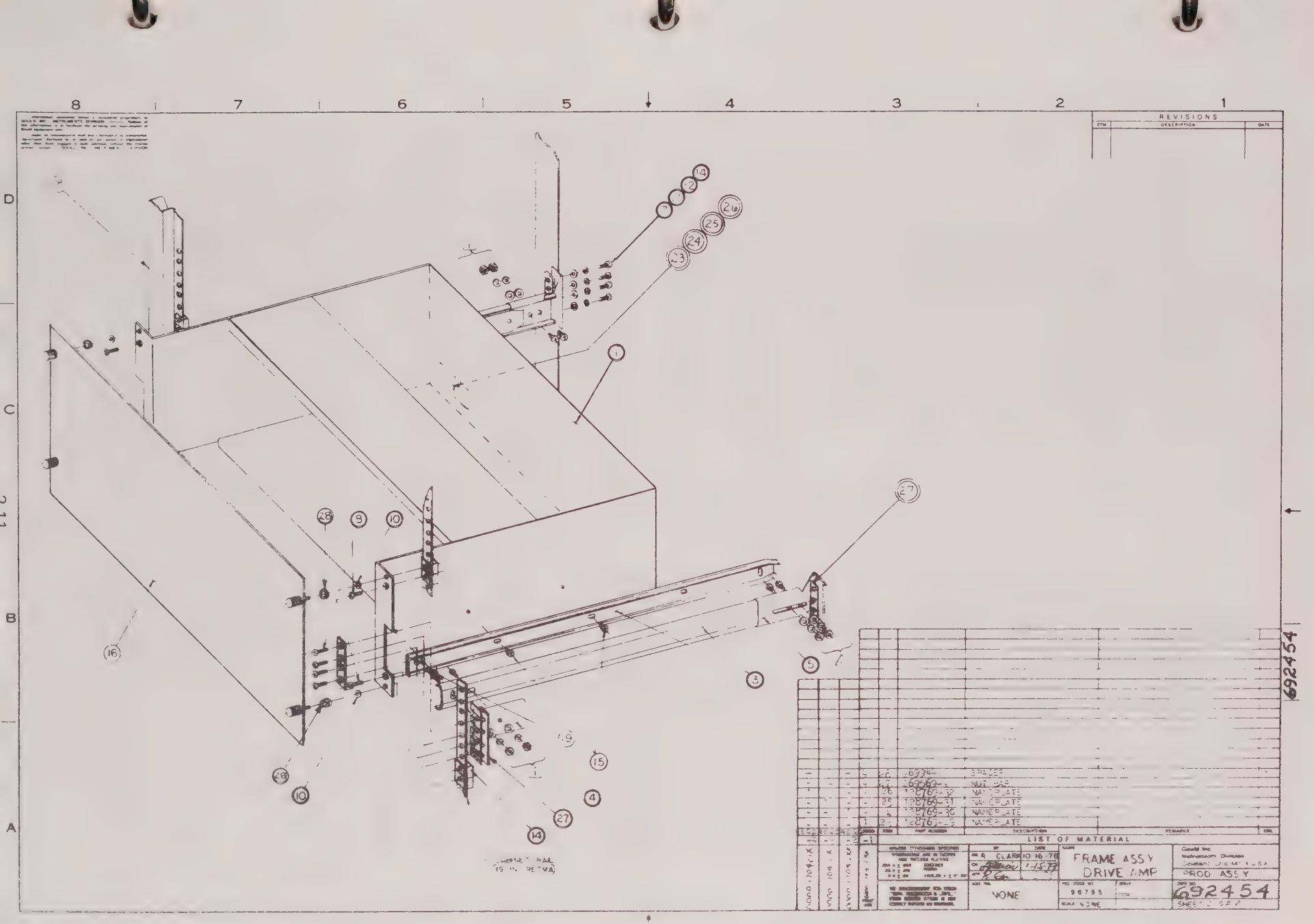

FIGURE 2-13 DRIVE AMP FRAME INSTALLATION

2.8 INSTALLATION OF PREAMPLIFIER PANELS AND CAGES

Installation for the following preamp panels and cages are found in the manuals listed below:

MANUAL NUMBER	MODELS	DESCRIPTION
11-801202-XX	11-1202-15, (-19 & -22)	Preamp Cage Kits
892035	892035	8 Ch Preamp Assy
13-804185-XX	13-4185-10	D.C. Preamplifier
805403-21	0000-5403-21	Amplifier Calibration Unit

2.9 CHART TAKE-UP INSTALLATIONS

a. Model 11-2231-01

NOTE: Take-up kit can be installed in an oscillograph already installed in a rack or cabinet, provided rear of oscillograph is accessible.

1. Open bezel lock and pull paper drawer out as far as possible.

2. Hold spacer behind pulley housing assembly and attach housing assembly to left side of paper drawer with three screws.

CAUTION: Check to be sure straight pin in pulley shaft clears side plate hole when pulley is rotated. Apply locktite to threads of screws and tighten.

3. Refer to Detail A in Figure 2-14 and attach motor and bracket assembly to rear of paper drawer using two screws, flat washers, lock washers and nuts.

4. Install grommet in rear of paper drawer and feed motor leads thru grommet. Place belt over motor and drive pulleys and check belt tension. Adjust belt tension, if required, by loosening three screws on side of motor bracket and positioning motor so center of belt can be depressed approximately 1/2-inch with firm finger pressure (five pound). Tighten screws. (Detail C, Figure 2-14).

5. Remove two countersunk screws from side of paper drawer and remove rod (if installed) extending across bottom of paper drawer (located approximately 6-1/2 inches from front of side plates). Rod and screws will not be used.

6. Remove screw, lockwasher, flat washer and shim securing spring and lever to arm assembly. Insert lever end of arm assembly thru left side plate. Spring side of paper drawer slightly to allow right end of arm assembly to be seated.

7. Place lever and spring over D-shaped shaft and secure using screw, lockwasher, flat washer, and shim removed in step 6.

8. Remove four flat-head screws which attach left slide to paper drawer.

9. Slide center arm of slide back to allow access to JOG switch and take-up switch mounting area.

10. Mount JOG switch to top of paper drawer. (C, Figure 2-14).

11. Thread take-up switch and paper supply sensing leads thru clamp and attach take-up bracket and clamp to side of paper drawer using screws, lockwasher, and flat washers. (C, Figure 2-14).

12. Tighten pivot pin then back off 1/8-turn.

13. Depress take-up bracket and tighten clamp screw. (C, Figure 2-14).

14. Attach left slide to paper drawer using four flat-head screws removed in step 8.

15. Attach motor leads to terminal board TB-703 at terminals 18 and 19.

16. Attach JOG switch leads to terminal board TB-703 as follows:

LEAD (Color)	TERMINAL
Brown/White	16
White/Brown/Yellow	17
White/Red	19 (with motor lead)

17. Install paper core on rewind shaft assembly and install in paper drawer.

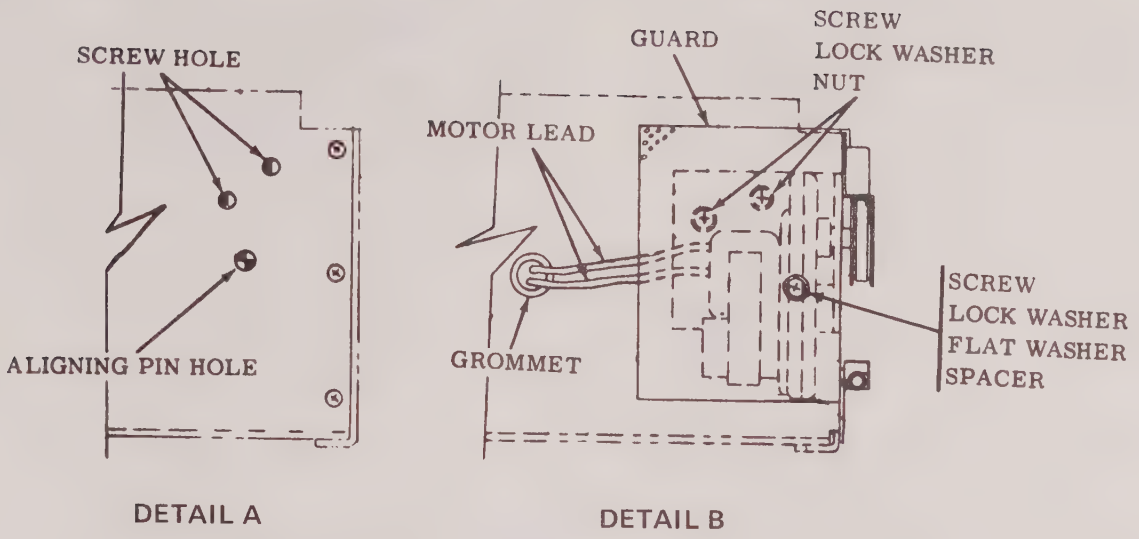

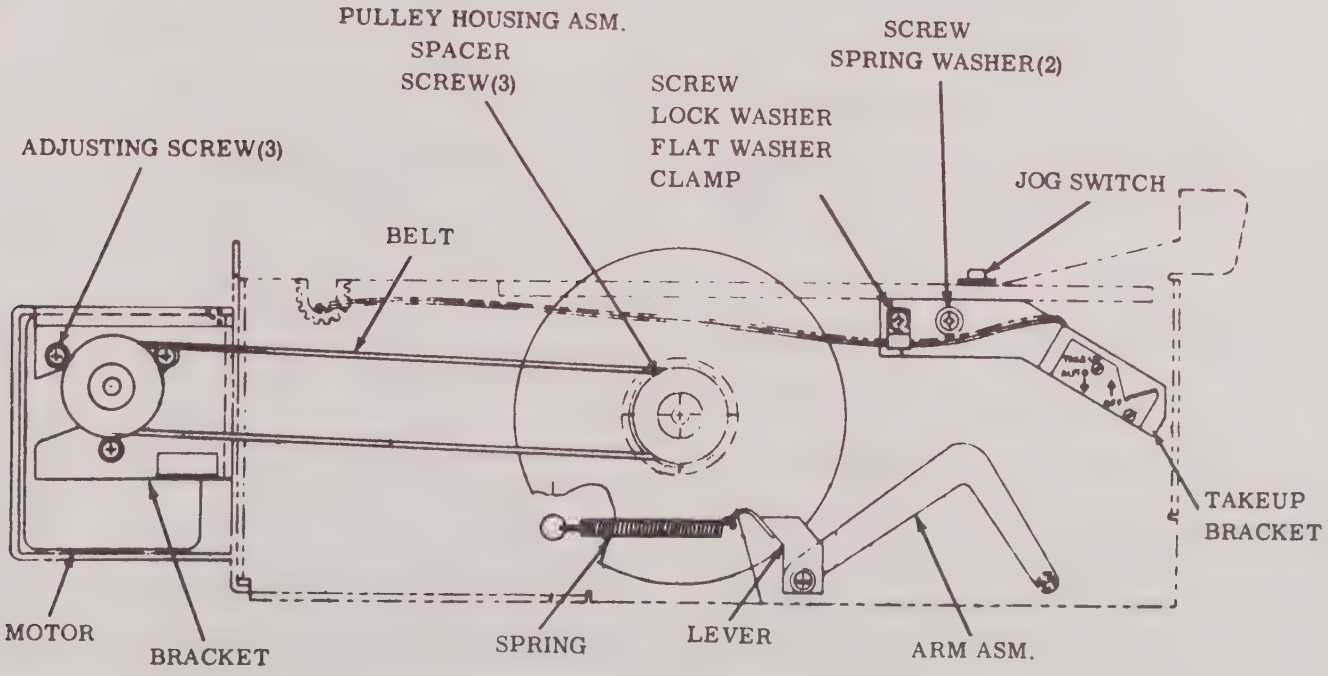

FIGURE 2-14 INSTALLATION OF INTERNAL CHART TAKEUP MODEL 11-2231-01

NOTE: Check to be sure rewind shaft engages straight pin in drive pulley shaft.

b. Models 11-2402-53 & 11-2402-54

The Short Run External Chart Takeup, Model 11-2402-54, and Extended Run External Chart Takeup, Model 11-2402-53, use the following installation procedure. Refer to Figure 2-15.

1. Press both release levers and pull oscillograph out as far as possible
2. Remove two screws from plugs on left and right side of bezel and remove plugs.
3. Remove two screws from top front of control panel.
4. Pull control panel slightly away from bezel, but do not remove.
5. Slide chart takeup supports thru the bezel openings and align notch and holes in supports with holes in oscillograph side plates.

NOTE: Keep cable over top of right support during installation.

6. Secure chart takeup to oscillograph with four screws supplied with takeup.
7. Pull out control panel far enough to gain access to connector.
8. Plug motor assembly connector into connector on inside of control panel.
9. Install control panel and secure with two screws removed in step 3.
10. Place shaft assembly into the support assembly.

NOTE: The following procedure applies only to Model 11-2402-53.

11. Check that paper clears left hub (approximately 1/32 inch clearance is adequate).
12. If the chart paper does not have the proper clearance the left hub must be adjusted to accommodate the paper as follows:
    a. Loosen two set screws in the spring stop.

NOTE: DO NOT Loosen set screws in stop.

    b. Grasp the left hub firmly and rotate the stop and shaft until the hole in the collar of the left hub is aligned with the set screw.
    c. Loosen set screw with an Allen wrench and leave wrench in position.
    d. Rotate the stop and shaft until the proper adjustment is reached. (Clockwise moves the hub to the left right; counterclockwise moves the hub to the left.
    e. Tighten set screw and remove wrench.
    f. Tighten set screws in spring stop.
13. Remove hub and shaft assembly from unit.
14. Place paper core onto shaft and twist paper core counterclockwise until core is against hub.
15. Place right hub onto shaft and twist screw until core is against hub.
16. Position assembly on chart takeup.
17. Check paper clearance at right hub (approximately 1/32 inch clearance is adequate).
18. If adjustment is necessary, grasp the paper core and twist the right hub screw until the proper clearance is obtained.
19. Attach the chart paper to the core.

c. Model 11-2402-52

The external chart takeup kit 11-2402-52 is installed with the following procedure and is shown in Figure 2-16.

1. Turn off instrument.
2. Release bezel lock and pull out writing drawer.
3. Remove two set screws from pulley.
4. Install teflon pulley onto pulley hub.
5. Align holes in teflon pulley with holes in hub and install two set screws supplied with kit.
6. Attach takeup arm to front panel with two filister-head screws supplied with kit.
7. Align right takeup arm with two holes in front panel and attach with two flat-head screws.
8. Stretch spring belt, attached to left arm assembly, over teflon pulley.

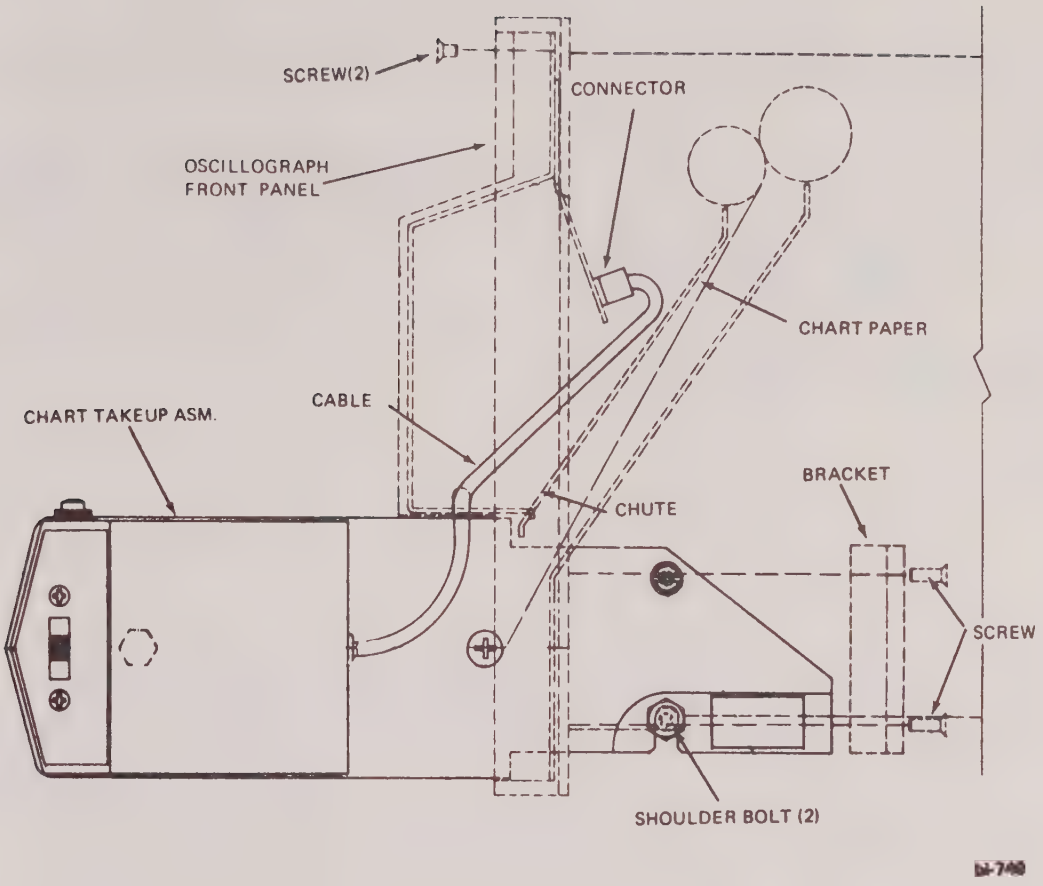

FIGURE 2-15 INSTALLATION OF TAKE-UP KIT MODELS 11-2402-53 and 11-2402-54

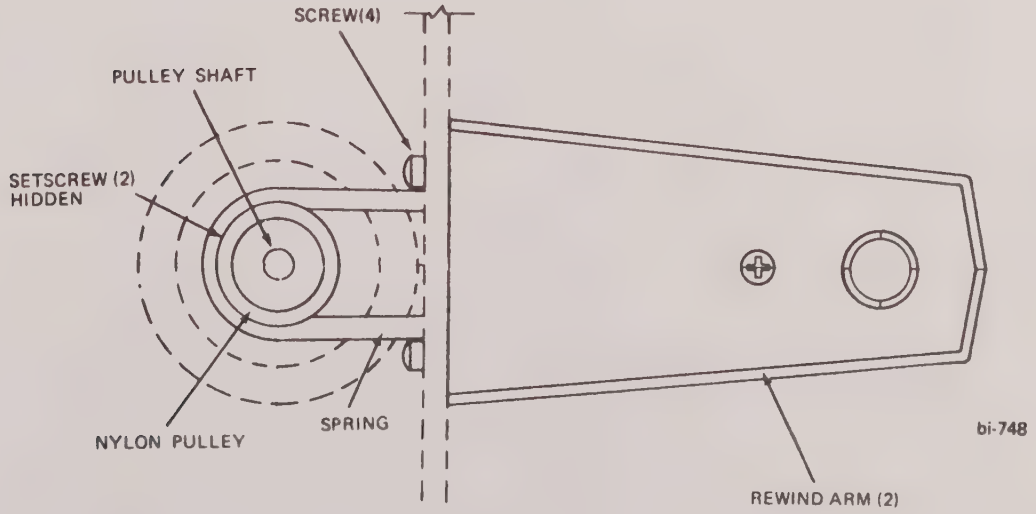

FIGURE 2-16 INSTALLATION OF TAKE-UP MODEL 11-2402-52

9. Pull out spring loaded locking knob on left arm assembly.

10. Place takeup shaft between arm assemblies and lock into position by rotating shaft to align with pins on locking knob and release knob.

11. Slide writing drawer into unit and engage bezel lock.

12. Run thru enough paper to start paper around takeup shaft. Be certain paper is snug around shaft.

NOTE: Do not attach paper to takeup shaft with tape or other adhesive.

2.10 INTERCHANNEL EVENT MARKER INSTALLATION

Installation instructions for 7 Interchannel Event Marker Kit found on drawing 692792 in Section VIII.

SECTION III

OPERATION

3.1 GENERAL

This section describes and illustrates the operation of the Gould 200 recording system and its various components. It also contains instructions for preliminary checks of the system prior to normal operation.

3.2 PREAMPLIFIERS, & PREAMP PANELS

The preamplifier panel or preamplifiers used in the 1704 system are all solid state unit designed to combine compactness with extreme fidelity, stability and input security. Controls are simple, easy to see, and positive in settings. A complete description of the preamplifier(s) used in this particular system is contained in the preamplifier manual behind this manual.

3.3 OSCILLOGRAPH CONTROL DESCRIPTION

a. Vertical Oscillograph

The circled numbers in Figure 3-1 (1 thru 6) correspond with the items listed on the following page. Item 7 is located inside the oscillograph and described only.

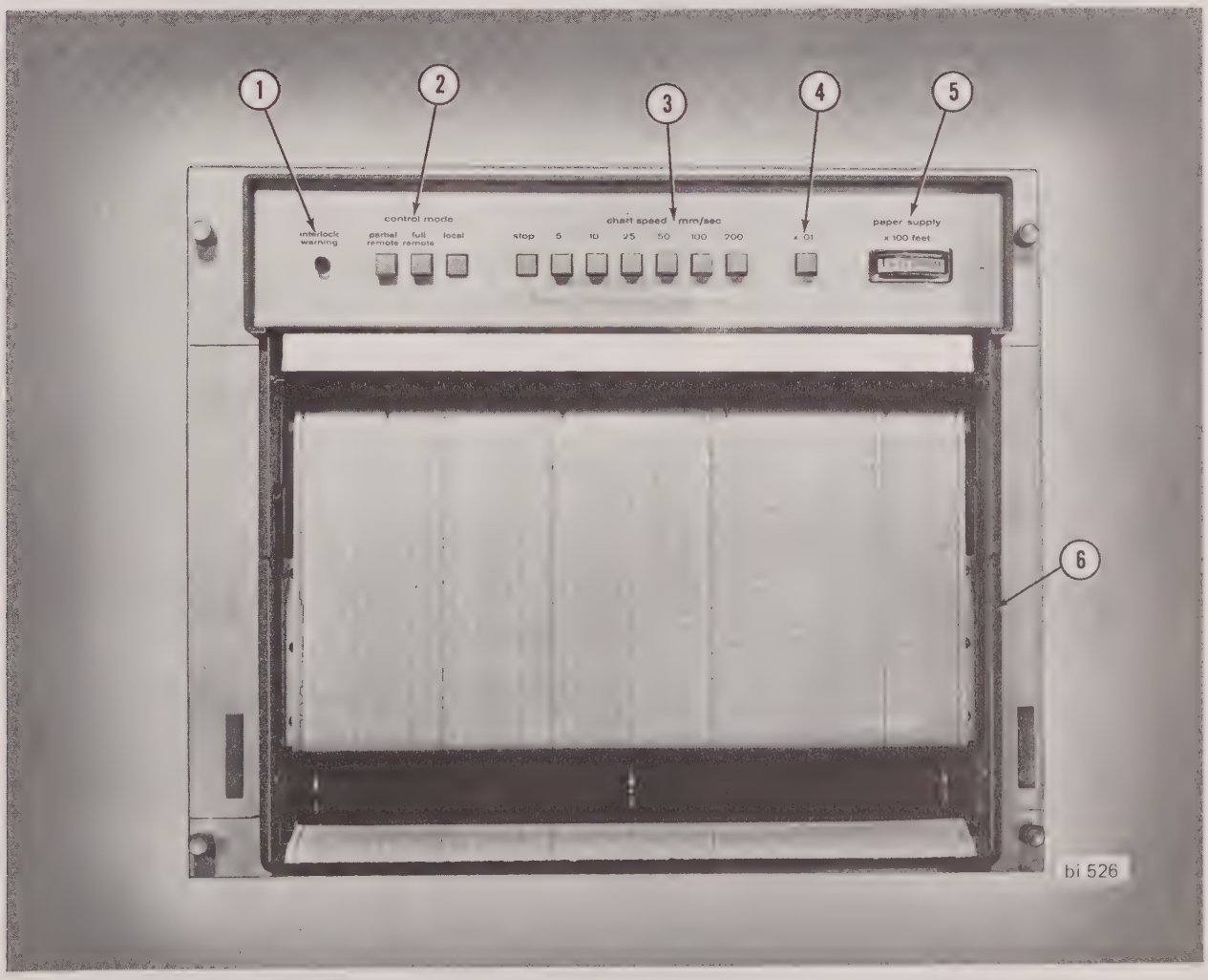

FIGURE 3-1 VERTICAL OSCILLOGRAPH FRONT PANEL CONTROLS

1 Interlock Warning Light . . . . . .

The interlock warning light is controlled by an interlock switch located in the paper supply drawer. When warning light is illuminated, it indicates an open interlock switch due to an empty paper supply roll or the bezel lock not being engaged.

NOTE: The oscillograph will not operate when the warning light is illuminated.

2 Control Mode . . . . . .

The control mode is a three-position switch with the following functions:

a. Partial Remote — When PARTIAL REMOTE button is depressed, chart drive ON—OFF control is transferred to a remote location thru connector J-4. Chart speed control remains at the oscillograph.

b. Full Remote — When FULL REMOTE button is depressed, all chart speed control is transferred to the remote location thru J-4.

c. Local — When LOCAL button is depressed, full control is at the oscillograph.

3 Chart Speed mm/sec . . . . . .

The chart speed mm/sec is a seven-position switch with the following functions:

a. Stop Button — Depressing STOP button stops chart drive operation and turns off power to pens.

b. Chart Speed Buttons — One for each speed, marked 5, 10, 25, 50, 100 and 200 mm/sec. Button depressed indicates chart drive speed.

NOTE: Depressing any of the chart speed buttons releases the STOP button and turns on chart drive motor.

4 X.01 Button . . . . . .

When X.01 button is depressed, chart speeds of 5, 10, 25, 50, 100, and 200 mm/sec are multiplied by .01 and become .05, .1, .25, .5, 1 and 2 mm/sec.

5 Paper Supply X100 Feet . . . . . .

The paper supply X100 feet indicator provides a quick reading of the amount of paper remaining on supply roll shaft. The dial is in increments from zero to 1000 feet and is set by means of an adjusting screw on right side of oscillograph.

6 Bezel Lock . . . . . .

The Bezel Lock locks the paper supply drawer into the oscillograph. It is attached to the writing bar and pressure roller. The oscillograph will not operate unless the bezel lock is in closed position.

7 Event Marker Switches . . . . . The two five-position event marker switches, which are mounted inside the oscillograph, function as follows:

a. 1 Sec – When switch is in 1 SEC position, pen deflects in one direction every second and in the opposite direction every tenth second.

b. 10 Sec – When switch is in 10 SEC position, pen deflects in one direction every 10 seconds.

c. Off – When switch is in OFF position, event marker does not operate.

d. Ext – When switch is in EXT position, event marker is connected to terminals on connector J-5 on rear panel so that external marker signals may be used.

e. Aux –

1. With L.H. Timer switch in "AUX" position, and control board timer switch "ON", timer pulses will be directed to L.H. event marker, Left deflection only.

2. With L.H. or R.H. Timer Switch in "AUX" position and timer switch "OFF", an external TTL input to connector J-114 of drive amp frame will cause the L.H. and R.H. event markers to deflect as follows: J-114 +TTL to pin 1, L.H. Marker, Left Deflection. +TTL to pin 2, R.H. Marker, Right Deflection. Common to pin 3.

b. Horizontal Oscillograph

The circled numbers in Figure 3-2 (1 thru 7) correspond with the items listed on the following page.

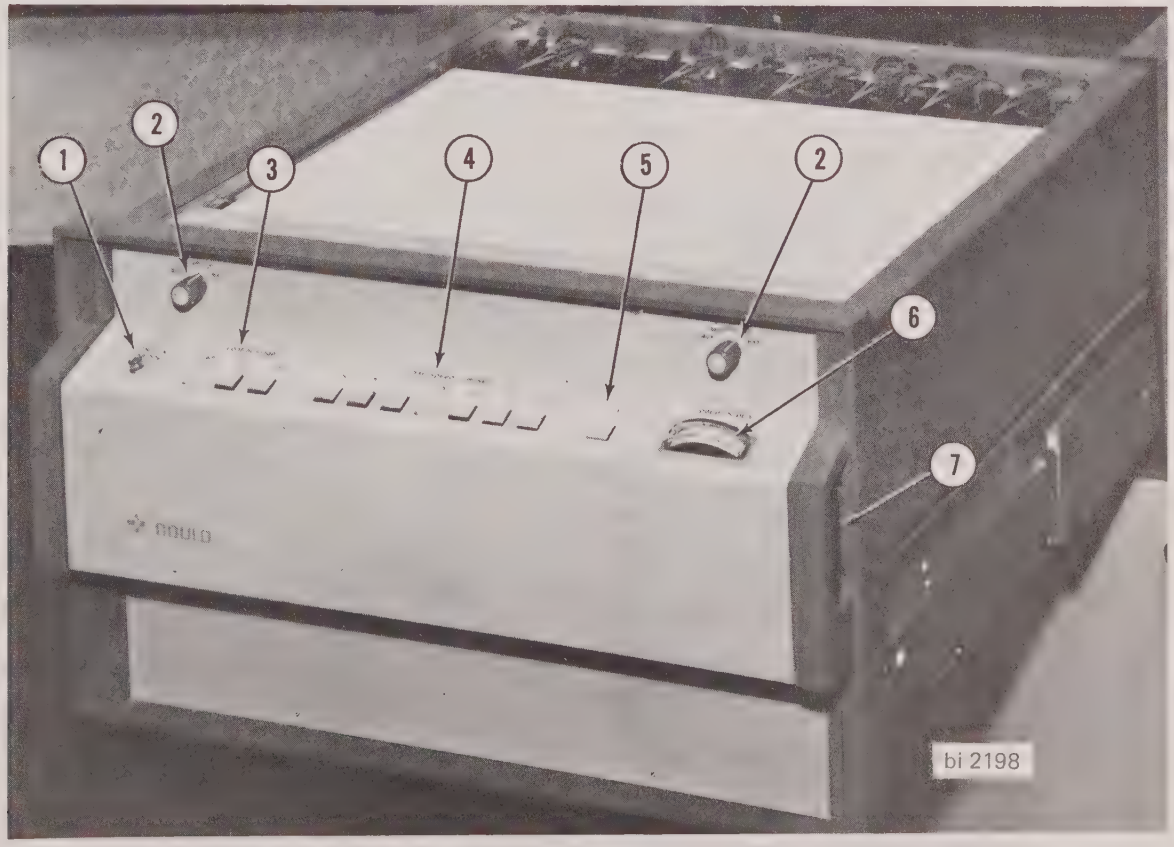

FIGURE 3-2 HORIZONTAL OSCILLOGRAPH CONTROL PANEL CONTROLS

1 Interlock Warning Light . . . . . The interlock warning light is controlled by two switches; one located beneath the writing table and the other located on the paper supply arm assembly. When warning light is illuminated, it indicates that one, or both, of the interlock switches are open due to an empty paper supply roll or the writing table not locked in position.

NOTE: The oscillograph will not operate when the warning light is illuminated.

2 Event Marker Switches . . . . . The two five-position event marker switches function as follows:

a. 1 Sec – When switch is in 1 SEC position, pen deflects to the left every second and to the right every ten seconds.

b. 10 Sec – When switch is in 10 SEC position, pen deflects to the right every 10 seconds.

NOTE: The ten second interval may be changed to 20, 30 or 60 seconds by an internal adjustment of the standard "multi-choice" timer. Refer to Paragraph in Section VI, Maintenance Section,for setting timer instructions.

c. Off – When switch is in OFF position, event marker does not operate.

d. Ext – When switch is in EXT position both coils of event markers are connected to terminals on connector J-2 on main connector panel so that external marker signals may be used.

e. AUX – Refer to "Event Marker Switches" 7 e., on Page 3.3.

3 Control Mode . . . . . The control mode is selected by a three-position switch with the following functions:
(Buttons illuminate when pushed)

a. Partial Remote – When PARTIAL REMOTE button is depressed, chart drive ON–OFF control is transferred to a remote location thru connector J-4 on main connector panel. Chart speed control remains at the oscillograph.

b. Full Remote – When FULL REMOTE button is depressed, all chart speed control is transferred to the remote location thru connector J-4 on main connector panel.

c. Local – When LOCAL button is depressed, full control is at the oscillograph.

4	Chart Speed mm/sec . . . . . (Buttons illuminate when pushed)	The chart speed is selected by a seven-position switch with the following functions: a. Stop Button — Depressing STOP button stops chart drive operation and turns off power to pens. b. Chart Speed Buttons — One for each speed, marked 5, 10, 25, 50, 100 and 200. Button depressed indicates chart drive speed. **NOTE: Depressing any of the chart speed buttons releases the STOP button and turns on chart drive motor.**
5	X.01 Button . . . . . (Illuminates in the .01 position)	When X.01 button is depressed, chart speeds of 5, 10, 25, 50, 100 and 200 mm/sec are multiplied by .01 and become .05,.1, .25, .5,1 and 2 mm/sec.
6	Paper Supply X100 Feet	The paper supply X100 feet indicator provides a quick reading of the amount of paper remaining on supply roll shaft. The dial is in increments from zero to 1000 feet and is set by means of an adjusting screw on right side of oscillograph.
7	Release Lever . . . . . (one each side)	Hand release levers. Allows Oscillograph to be slide out of enclosure when depressed.

3.4 OSCILLOGRAPH OPERATION CHECK

NOTE: Oscillograph may be tested outside of unit.

a. Front Panel Pushbuttons

1. PARTIAL REMOTE MODE. Jumpering pins R and S on oscillograph cable connector J-701 should move chart paper at a pre-selected speed.

2. FULL REMOTE MODE. Apply +28 volts from pin R of J-701 to remote functions as brought out to pins on J-701 (refer to wiring diagrams 292585 or 292781 in Section VII). All chart speed control is transferred to a remote location.

3. LOCAL. Pressing local pushbutton allows full control of unit at oscillograph control panel.

4. CHART SPEED. Check to see that oscillograph operates at all speeds.

b. Event Marker Switch

Each event marker position should produce the following results:

1. EXTERNAL. This position connects event marker to external inputs on J-701. Applying 28-volts DC to input terminals will energize corresponding event marker (refer to wiring diagram 292585 or 292781).

2. OFF. This position turns off event marker.

3. 10. This position produces one event marker pulse to the right every 10 seconds.

4. 1. This position produces one event marker pulse per second. Nine left and one right every tenth second.

5. AUX — Refer to "Event Marker Switches" 7 e., on Page 3.3.

c. **Interlock Warning Light**

If unit runs out of paper or bezel is opened, light goes on and chart drive stops.

NOTE: It is permissible for interlock light to flicker on momentarily when stop button is released. Warning light will not go on when chart speed is in stop position.

3.5 PRELIMINARY OPERATION

a. **General**

This paragraph contains instructions for preliminary operation with the system in various configurations. Be sure to use the instructions that apply to this system.

b. **Operation of System with 13-4185-10 Series Preamplifier (Pushbutton Model)**

1. Be sure POWER on-off switch is in OFF position.
2. Press STOP button on oscillograph control panel.
3. Make sure power input cable is attached to connector TB-1 on main connector panel and other end connected to a power source of 105-125 volts.
4. Make sure signal input cable is attached to connector J-3 on main connector panel.
5. Connect the external function cable to connector J-2 on the main connector panel.
6. Loosen locking knobs on SENSITIVITY X1 controls and rotate controls to their full clockwise (detent) position.
7. Place all POLARITY switches in N (normal) position, if applicable.
8. Press all attenuator OFF buttons.
9. Depress LOCAL button in control mode group on oscilloscope control panel.
10. Depress POWER on-off switch to turn on instrument.
11. Allow the unit fifteen minutes to warm up to permit the amplifiers to stabilize.
12. Press ZERO button located in recorder group on preamplifier.

NOTE: All pens should locate at chart center. If they do not, center pens with PEN POSITION controls.

13. Depress X.01 button on oscillograph and select a chart speed of 100 or 200 millimeters per second.

NOTE: This will move chart at one or two millimeters per second.

14. Press CHECK button located in recorder group. All pens should deflect exactly 25 chart divisions to the left from a built-in calibration source.

NOTE: If no deflection is obtained, the CAL switch located on rear panel of the preamplifier may be in EXT (external) position. Remove back cover from unit and make certain switch is in INT (internal) position.

15. If CAL switch is in INT position and 25 divisions of required accuracy is not obtained, refer to Section VII for drive amplifier calibration and the preamplifier manual for calibration.
16. Press ZERO button to return pens to chart center.
17. Press and hold IDENTIFY button and consecutively press volts/division buttons starting at. .05. Pen should deflect 2 chart divisions for each attenuator step. Pens will return to zero when IDENTIFY button is released.
18. Press RECORD button, adjust pen to desired zero base line, and select desired volts/division setting.

Unit is now ready for operation.

c. **Operation of System with 4600 Series Preamplifier**

NOTE: Be sure to read the operating instructions in the preamplifier manual.

1. Perform steps 1 thru 3 in step b above.
2. Attach signal input cables to preamplifiers. (Round holes on preamp cage.)

CAUTION: Refer to the signal connection procedure in the preamplifier manual to make sure proper connections are made. Failure to do this can result in damage to the instrument.

3. Turn the preamplifier ATTENUATOR (VFS, etc.) controls to the OFF position.

4. Depress POWER on-off switch to turn on instrument.

5. Depress LOCAL button on oscillograph control panel.

6. Depress X.01 button on oscillograph control panel and select a chart speed of 100 or 200 millimeters per second.

NOTE: This will move chart at one or two millimeters per second.

7. Center pens with PEN POSITION controls located on pen position panel or drive amp frame.

8. Check to see that PEN POSITION control allows pen to traverse full chart width.

Unit is now ready for operation.

e. Operation of System with Eight Channel Preamplifier Assembly – 892035.

1. Perform steps 1 thru 4 in step b above.

2. Turn the SENSITIVITY X1 controls to their full clockwise (detent) position.

3. Turn VOLTS FULL SCALE controls to OFF positions.

4. Depress LOCAL button on oscillograph.

5. Depress POWER on-off switch to turn on instrument.

6. Depress X.01 button on oscillograph and select a chart speed of 100 or 200 millimeters per second.

NOTE: This will move chart at one or two millimeters per second.

7. Apply known voltage to preamplifier input and increase SENSITIVITY control setting to obtain pen deflection near full scale on chart paper. Pen deflection should equal SENSITIVITY control setting.

8. Repeat step 7 for each channel.

Unit is now ready for operation.

f. Operation of System with Amplifier Calibration and System Power Assembly

NOTE: The amplifier calibration unit is used with 4600 series preamplifiers. Be sure to read the operating instructions for the preamplifier.

1. Be sure POWER on-off switch is in OFF position.

2. Press STOP button on oscillograph control panel.

3. Make sure power input cable is attached to connector J-1 on main connector panel and other end connected to a power source of 105-125 volts.

4. Make sure signal input cables are attached to preamplifier inputs.

CAUTION: Refer to the signal connection procedure in the 4600 series preamplifier manual to make sure proper connections are made. Failure to do this can result in the damage to the instrument.

5. Depress POWER on-off switch to turn on instrument.

6. Depress LOCAL button of control mode group on oscillograph control panel.

7. Depress X.01 button on oscillograph and select a chart speed of 100 or 200 millimeters per second.

NOTE: This will move chart at one or two millimeters per second.

8. Center pens with PEN POSITION controls located on pen position panel or drive amp frame.

9. Select a channel by depressing one of the CHANNEL SELECTOR buttons on the amplifier calibration unit.

10. Recenter pen, if necessary, in channel selected with PEN CENTERING control on amplifier calibration unit.

11. Depress the CAL SIGNAL switch marked -25. Pen should deflect 25 divisions to the left.

12. Depress CTR button in CAL SIGNAL switch. Pen should return to chart center.

13. Depress CAL SIGNAL switch marked +25. Pen should deflect 25 divisions to right.

14. Repeat the above procedure for each channel.

System is now ready for operation.

3.6 CHART TAKE-UP OPERATION

The power switch may be placed in the HIGH or LOW position. This switch allows the chart take-up to operate when any one of the chart speed buttons is depressed.

a. When starting a rewind, the power switch should be in the LOW position. When the rewound roll approaches approximately four inches in diameter, the power switch can be placed in the HIGH position.

b. The takeup is capable of rewinding a full roll of chart paper with the power switch in the LOW position, however, the roll will become loose as it approaches its maximum diameter.

c. If a new rewind is started with the power switch in the HIGH position, the takeup may override the oscillograph and pull the paper through it, causing distortions in the recording. in the event this happens, the power switch should be placed in the LOW position.

The pushbutton switch operates the chart takeup when power is ON to the oscillograph.

When the chart paper is to be reviewed, place the power switch in the OFF position. This will render the chart takeup inoperative but the oscillograph will still pay out chart paper. When the reviewing has been completed, press the pushbutton switch and the chart takeup will reel in all the slack.

3.7 TIMER SETTING

The timer actuates left event markers at programmed repetition rates. Selection of repetition rates is made via switch S-104 on the control timer board located in the drive amp frame. Set rate as follows:

1. Turn oscillograph power OFF.

2. Loosen the two screws which secure the control board and pull out of the drive amp frame.

3. Set switch positions for desired repetition rate per Table 3-1.

NOTE: Use switch positions for line frequency recorder operates on.

4. Replace control board and secure with screws.

5. Turn oscillograph power ON.

6. Turn TIMER switch ON. Timer ready for operation.

TABLE 3-1. SWITCH SETTINGS VS TIMER REPETITION RATE FOR VARIOUS POWER LINE FREQUENCIES

REPETITION RATE	60 HZ LINE		50 HZ LINE		400 HZ LINE	
	SW ON	SW OFF	SW ON	SW OFF	SW ON	SW OFF
0.1 SECOND	2, 3, 5	1, 4, 6, 7, 8	1, 3, 5	2, 4, 6, 7, 8	3, 6	1, 2, 4, 5, 7, 8
1.0 SECOND	2, 3, 6	1, 4, 5, 7, 8	1, 3, 6	2, 4, 5, 7, 8	3, 7	1, 2, 4, 5, 6, 8
10.0 SECONDS	2, 3, 7	1, 4, 5, 6, 8	1, 3, 7	2, 4, 5, 6, 8	3, 8	1, 2, 4, 5, 6, 7
100.0 SECONDS	2, 3, 8	1, 4, 5, 6, 7	1, 3, 8	2, 4, 5, 6, 7	--	--
0.01 MINUTE	2, 4, 6	1, 3, 5, 7, 8	1, 4, 6	2, 3, 5, 7, 8	4, 7	1, 2, 3, 5, 6, 8
0.10 MINUTE	2, 4, 7	1, 3, 5, 6, 8	1, 4, 7	2, 3, 5, 6, 8	4, 8	1, 2, 3, 5, 6, 7
1.00 MINUTE	2, 4, 8	1, 3, 5, 6, 7	1, 4, 8	2, 3, 5, 6, 7	--	--

SECTION IV

THEORY OF OPERATION

4.1 GENERAL

The Mark 200, 1704 Series Recorder (Fig. 4-1) is an 8-channel module-type solid-state system, consisting of preamplifier, drive amplifiers, and oscillograph, interconnected thru the main connector panel. The recorder incorporates an effective servo-controlled position feedback system, high-torque penmotors, and pressurized fluid writing.

The input to each channel, thru the preamplifier is single-ended and all eight outputs are single-ended and grounded, terminating at the penmotor drive amplifier.

4.2 CONTROL TIMER

The control board is mounted in the card cage in the rear of the recorder. Contained in the control board are the branch fuses, start/stop relay K-101, the +5Vdc and +28Vdc power supplies, and timer.

Fuses are provided to protect each power branch. Table 4-1 shows fuse and circuit protected.

DPDT relay K-101 controls power to the chart drive motor, ink solenoids, standard event markers, and optical couplers located in the pen drive amplifiers. It is energized when the chart STOP pushbutton is released. When energized, one set of contacts supplies power to the chart drive motor thru fuse F112 and activates the ink manifold solenoids. When de-energized, the other set of contacts inhibit the event markers and optical couplers in the pen drive amplifiers.

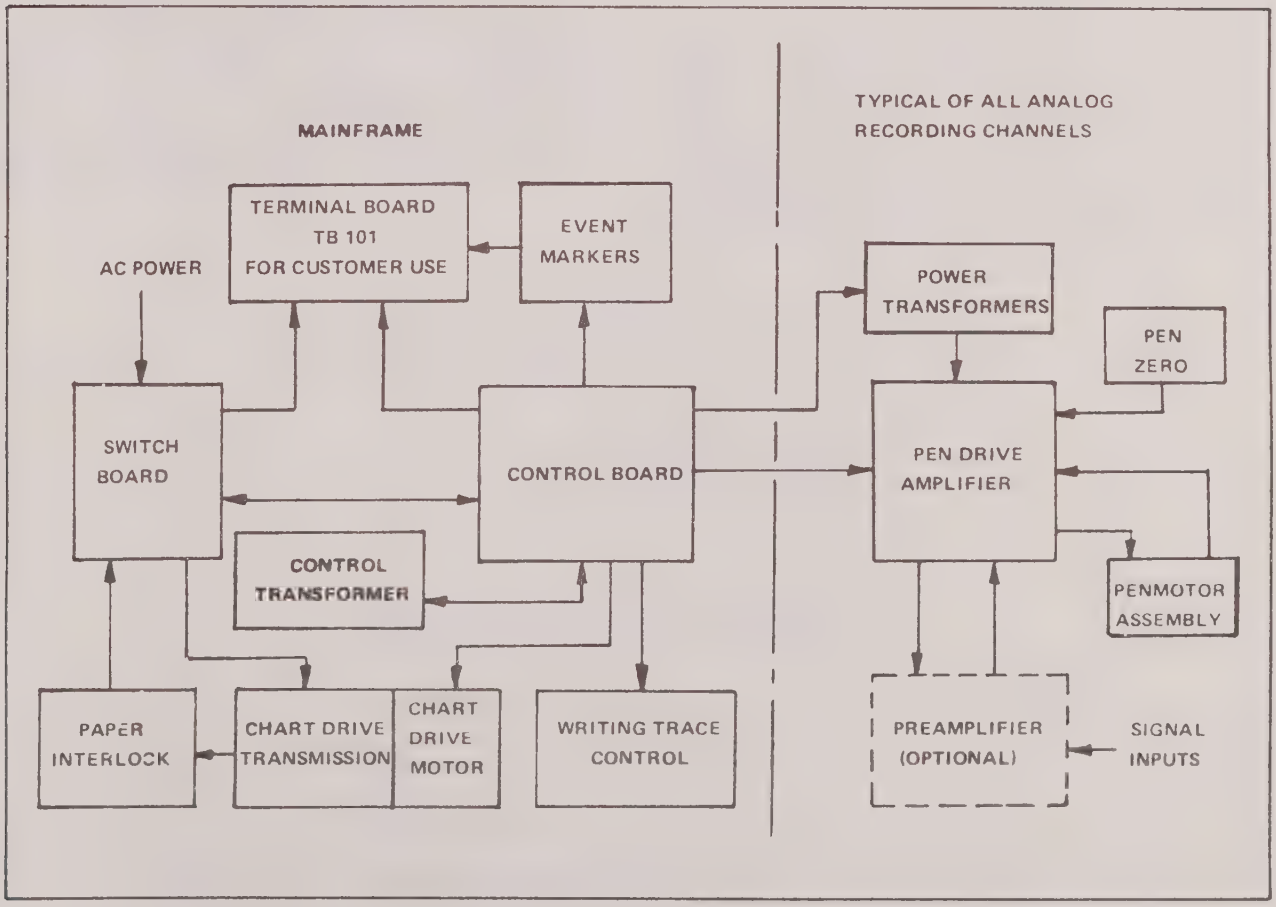

FIGURE 4-1 BASIC RECORDER BLOCK DIAGRAM

The control board contains two dc power supplies: +28V and +5V. The +28Vdc power source is obtained from bridge rectifier CR102 and control transformer T109. The unfiltered section of this section of the supply provides power to relay K-101, optional event marker solenoids, and the indicator lamps. The filtered section of this supply provides power to the standard event markers to insure accuracy when precise time events are required. The +5Vdc power source is obtained thru CR102 from a second winding on control transformer T109. This supply is filtered and regulated to provide power for the pen drive amplifier optical couplers and timer.

Pulsating dc voltage is provided from bridge rectifier CR101 to operate the ink supply solenoids.

The timer operates as a function of ac line frequency. Optical coupler U107 shapes the sinusoidal wave into a square wave. Binary counters U102 thrugh U105 count the square wave pulses. Switch S104 selects combinatios of U102 through U105 for the output pulse repetition rate (time interval) desired. The output pulse drives monostable multivibrator U106. Output from U106 turns on Q101 or Q102 activating the left event markers. (See Table 3-1).

4.3 ANALOG RECORDING CHANNELS

a. General

Each analog recording channel consists of a power transformer, pen drive amplifier, and penmotor. The channels are isolated from one another by using separate transformer power supplies and optical couplers. The optical coupler disables the pen drive amplifier whenever relay K-101 on the control board is de-energized from depressing chart STOP pushbutton or upon loss of ac power.

Each power transformer has two primary and three secondary windings. The primary windings can be wired in parallel for 115vac operation of in series for 230vac operation. Two of the secondary windings (±35 to ±15 volts) provide power for the pen drive amplifier. The third (13vac — may be used in preamplifiers requiring isolated power supplies for bridge excitation or suppression.

Figure 4-2 shows a block diagram of an analog channel. The penmotor drive amplifier is a complete servo system and uses a linear voltage displacement transformer (Metrisite*) in the penmotor to develop position, and a velocity transducer for velocity. These signals are summed with the input signal in a dc error amplifier which, after amplification, drives the penmotor.

TABLE 4-1 FUSE VS CIRCUIT PROTECTED

FUSE	CIRCUIT PROTECTED
F101 To F108	Analog channel power transformers T101 to T108.
F109	Control transformer T109 which supplies power for the +5V and +28V dc power supplies.
F110	Fan motor B102.
F111	Ink solenoids.
F112	Chart Drive Motor
F113	115Vac convenience outlet.

b. Signal Limiter

The input signal enters the signal limiter and is summed with the pen zero signal. The summed signal is fed to a diode bridge circuit. Output from the bridge is limited to ±2.6 volts.

c. Frequency Compensation Network

Output from the signal limiter is fed to a frequency compensation network. Here, the signal's frequency response is adjusted to be flat within 2% from dc to 60Hz pen deflection and from dc to 125Hz for 10 division pen deflection. The frequency compensated signal is then fed to summing network where it is combined with error and velocity signals.

d. Oscillator and Demodulator

Position feedback is obtained from the Metrisite. Excitation for the Metrisite is obtained from a 20KHz Wein Bridge Oscillator. A demodulator attenuates the 20KHz carrier. Output from the demodulator is the position feedback signal.

e. Servo Control Amplifier

The compensated input signal, position feedback, and velocity are summed at the input of the servo amplifier. The output of this stage drives a Class B amplifier, which drives the pen to the proper position on the chart. This occurs when the summed signal is reduced to zero.

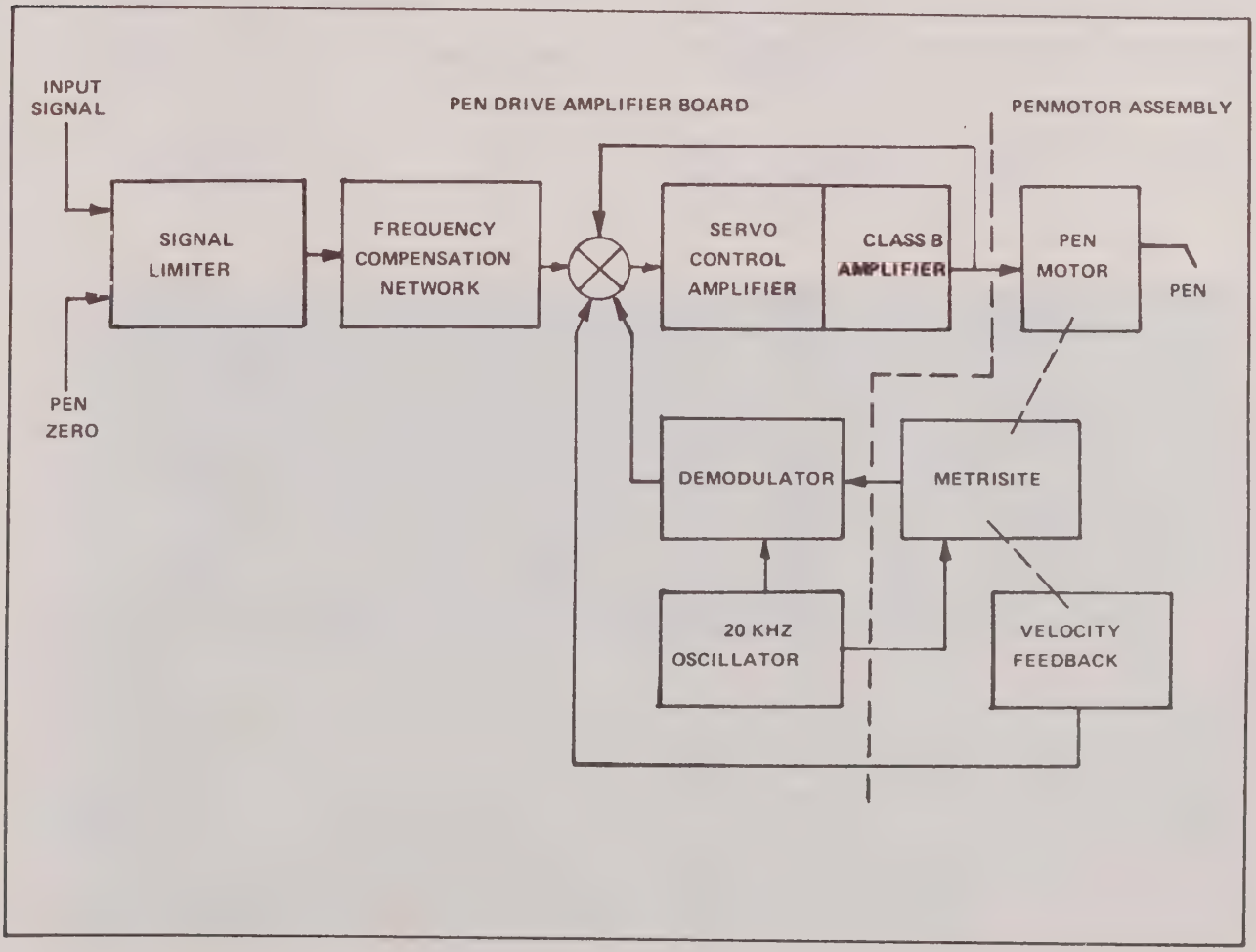

FIGURE 4-2 ANALOG CHANNEL BLOCK DIAGRAM

SECTION V

DRIVE AMPLIFIER CALIBRATION

5.1 SCOPE

The Drive Amplifier boards in the Gould 200 1704 recording system have been factory calibrated. Under normal conditions recalibration will not be required unless parts have been replaced. This section then describes the procedures necessary to calibrate the Drive Amplifier boards (PN 886220), and provides a board layout along with its associated parts list. In addition, a board layout and parts list is provided for the Control Timer board (PN 886327).

5.2 TEST EQUIPMENT REQUIRED

Proper test equipment is essential. Use the equipment specified below or its equal.

a. Function Generator — Wavetek Model 110 or equal.

b. DC Calibration Source — Digitec Model 311 or equal.

5.3 PRELIMINARY SETUP

a. If the system contains preamplifiers, remove each preamp prior to calibrating the associated drive amp.

b. Depress oscillograph STOP button. POWER switch is in off position (not illuminated).

c. Plug power cord into J-1 on main connector panel and proper ac voltage source.

d. Turn oscillograph on by depressing POWER switch.

5.4 CALIBRATION PROCEDURE

Calibration is required on pen drive amplifiers (one per channel) and preamplifiers (if recorder is so equipped). Only pen drive amplifier calibration is discussed in this manual. Refer to the applicable preamplifier manual for its calibration.

Calibration controls and procedures are identical for all channels. Refer to Figure 5-1 and calibrate each pen drive amplifier as follows:

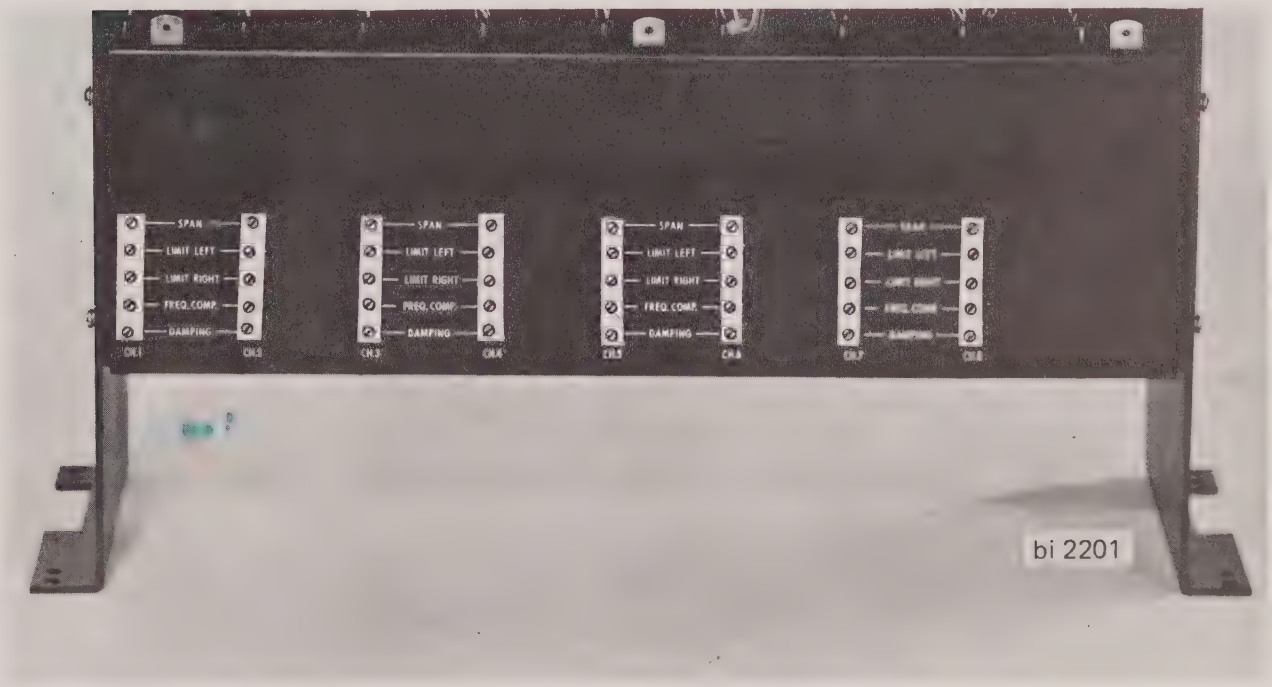

FIGURE 5-1 CALIBRATION CONTROLS

NOTE: When eight-channel preamplifier panel, Model 13-4185-10 is part of system, LEFT and RIGHT LIMITS (Steps 8 and 10 below) are interchanged. This is due to the inversion of output signals from the preamp panel to the amplifier. Unlike Figure 5-1, systems employing these preamp panels will have LIMITS marked correctly.

1. Connect dc calibration source to phone jack input of drive amplifier. Tip is high, ring is low.

2. Press oscillograph 5mm/sec CHART SPEED pushbutton.

3. Set dc calibration source to ZERO.

4. Set pen at channel center with pen position control.

5. Apply a +2.5 vdc ±0.25 mv signal to drive amplifier and adjust SPAN potentiometer (R-260) for full scale deflection within 0.1%.

6. Return dc calibration source to zero.

7. Turn pen position control full counterclockwise. Pen should deflect left to between 1.0 and 2.0 mm beyond full scale.

8. If deflection is NOT between 1.0 and 2.0 mm beyond full scale, adjust LEFT LIMIT potentiometer (R-208) for a 1.5 ±0.25 mm deflection beyond full scale.

9. Turn pen position control full clockwise. Pen should deflect right go between right to between 1.0 and 2.0 mm beyond full scale.

10. If deflection is NOT between 1.0 and 2.0 mm beyond full scale, adjust RIGHT LIMIT potentiometer (R-205) for a 1.5 ±0.25 mm deflection beyond full scale.

11. Connect function generator.

12. Apply a 4V p-p square wave with a 1.0Hz repetition rate.

13. Turn DAMPING potentiometer (R-231) clockwise until an overshoot is obtained. Then, turn slowly counterclockwise until overshoot is reduced to zero.

14. Check overshoot at 20 and 100 percent pen deflection. No overshoot should be present. Repeat Step 13 if necessary.

15. Increase chart speed to 25 mm/sec.

16. Apply a 5Hz sine wave, and adjust amplitude to obtain a 40 mm pen deflection.

17. Slowly increase frequency to 50Hz. Pen deflection should be within 0.5 mm of that at 5Hz.

18. If necessary, adjust FREQUENCY COMP potentiometer (R-209) until 50Hz deflection is within 0.5 mm of the 5Hz deflection.

5.5 DRIVE AMP AND CONTROL TIMER PART LISTS AND BOARD LAYOUTS

The part lists and board layouts found in Section VII are provided as an aid in assisting the user to select proper parts as repair becomes necessary.

SECTION VI

MAINTENANCE

6.1 SCOPE

This section describes and illustrates various operators maintenance procedures for the Gould 1704 200 Recording system.

6.2 CLEANING AND INSPECTION

a. General

The cleaning and inspection procedures covered in this chapter are limited to normal or common conditions usually encountered.

b. Cleaning

The importance of cleaning must be thoroughly understood by maintenance personnel. The presence of dirt or foreign substances is a constant threat to satisfactory repair. All parts must be cleaned before inspection, after repair and before assembly. Protect all parts from accumulation of dust and grit after cleaning. Avoid getting petroleum products such as dry-cleaning solvents, mineral spirits paint thinner or lubricants on rubber coverings or parts as they will deteriorate.

c. Inspection

Inspect electrical cables for insulation cracks due to excessive heat. Check cables for frayed or worn ends at connectors and check cable clamps for secureness. Check solder connections and printed circuit boards for cracks and proper soldering techniques. Check cable connectors for bent or distorted pins. Check for mechanical tightness including mounting of parts, nuts, screws, and lockwashers. Check for silkscreening clarity and touch-up chipped paint.

6.3 TOOLS AND EQUIPMENT

Tools and equipment listed in Table 6-1 are necessary to perform the maintenance procedures described in this manual. Items marked with an asterisk are shipped with the recorder.

TABLE 6-1 MAINTENANCE TOOLS AND EQUIPMENT

ITEM	PART NO.	REFERENCE		USE
		FIG.	PARA.	
Gage, Gram*	240601-910	6-8	6.12	Used to check pen pressure.
Scale (0-15 pounds)		6-2	6.8	Used to check paper tension.
Paper Supply Wrench*	242723-910	6.3	6.5	Used to install chart paper.
Wrench, Pen Pressure Adjustment*	1-120922-18	6-9	6.13	Used with gram gage to adjust pen pressure

6.4 LOADING OR CHANGING CHART PAPER VERTICAL OSCILLOGRAPH

The following procedure describes and illustrates the correct method of loading or changing chart paper.

1. Turn off equipment.

2. Release bezel lock on front of oscillograph (Figure 6-2).

3. Pull chart paper drawer out as far as possible.

4. Lift paper drag and remove supply roll shaft from chart paper drawer.

5. Remove paper core from shaft.

6. Place chart paper on shaft, so when shaft flange is on the left, paper will feed from roll with printed side up toward operator.

7. Turn paper supply roll shaft, with wrench which is stored in the paper supply drawer, counterclockwise until shaft flange is firmly against paper roll.

8. Place paper supply in drawer. Press in on right end and slide paper supply into position, making certain roll is completely seated, and release paper drag against roll.

NOTE: When installing paper supply, make certain flange is on left as operator faces instrument.

10. Position chart paper over writing bar, down over writing table behind reversible drive roller, then out between pressure roller and drive roller. This is for external operation (Figure 6-1).

NOTE: Be sure drive roll selector is in the external position (Figure 6-2).

For internal rewind, thread paper in front of reversible drive roller, back over pressure roller, under guide rods, then attach to top of takeup core (Figure 6-1).

NOTE: Be sure drive roll selector is in the internal position (Figure 6-2)

11. Check that the paper edges are an equal distance from side plates at right and left event pens and that event marker pens are centered in margins. A paper centering adjustment is provided on instrument left side plate, but this is factory set and normally requires no readjustment. In the event adjustment is necessary, refer to Paragraph 6.10.

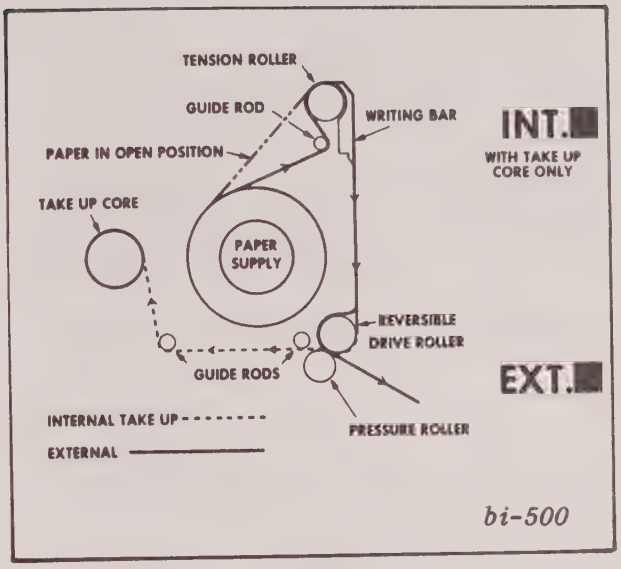

FIGURE 6-1 LOADING CHART PAPER

NOTE: Do not slide paper supply right or left on paper supply shaft. The paper core should always be against the flange.

12. Push paper drawer into writing position and engage bezel lock.

13. Operate oscillograph to run out about 10 feet of chart paper to be certain centering is correct and to allow chart tracking to stabilize. If paper is not centered, refer to Paragraph 6.10.

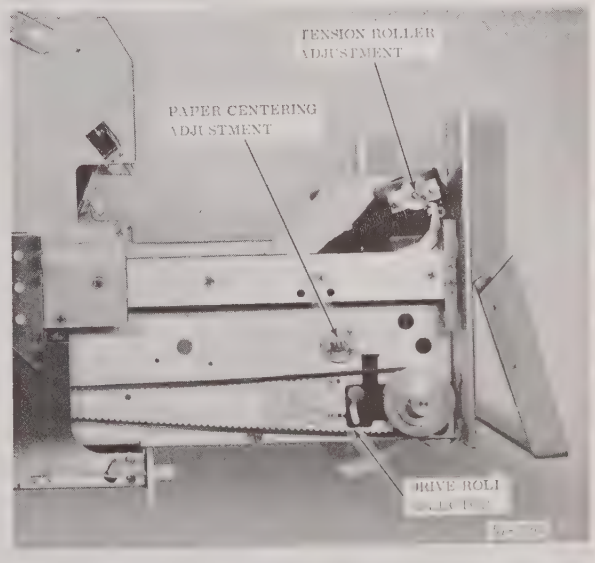

FIGURE 6-2 VERTICAL OSCILLOGRAPH LEFT SIDE

6.5 LOADING OR CHANGING CHART PAPER (HORIZONTAL OSCILLOGRAPH)

The following procedure describes and illustrates the correct method of loading or changing chart paper.

1. Press oscillograph STOP button.

2. Press both release levers (Fig. 6-3) and pull out oscillograph.

3. Lower both side panels (Fig. 6-3).

NOTE: Right and left means operator's right and left as he stands in front and faces unit.

4. Tear off chart paper against serrated edge and push pressure roller release lever (Fig. 6-3) down to release pressure on paper.

5. Pull paper from between drive and pressure rolls.

6. Lift front edge of writing table far enough to release ink pressure in pens. This may release droplets of ink under each pen. Slide paper forward along table surface until ink flow stops.

7. The writing table may now be raised to approximately 45° and withdrawn from side plate notches.

CAUTION: Careless paper loading techniques may result in damage to pens. Keep paper against writing table during removal and insertion of table. Avoid contact with pen tips.

8. Pull out soiled chart paper, tear off and discard.

CAUTION: Ink is indelible.

9. Raise paper drag assembly up and out of the way to self latching position.

10. Lift paper supply shaft up and out of oscillograph.

11. Remove paper core from shaft with tool stored on right side of oscillograph (Fig. 6-3).

12. Place chart paper on shaft with shaft flange on right side so that paper will feed from under side of roll going away from the operator. Tighten core firmly against flange.

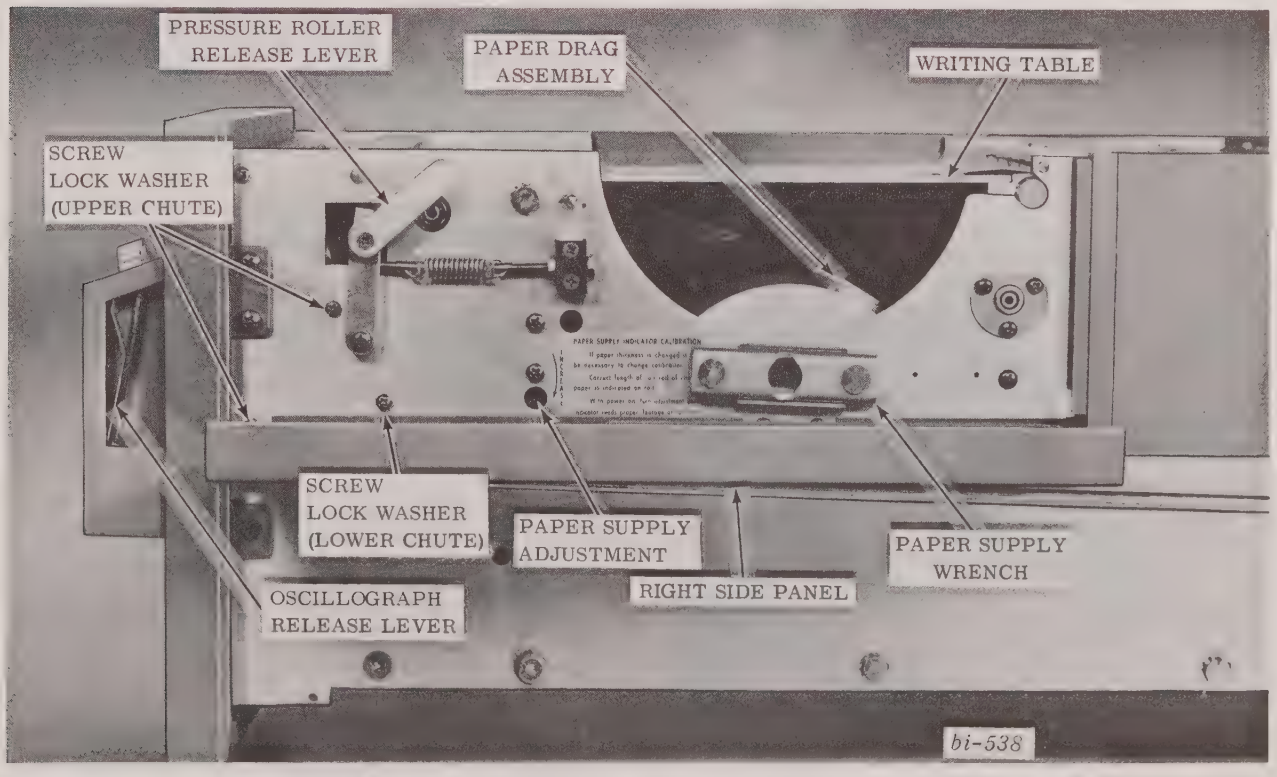

FIGURE 6-3 HORIZONTAL OSCILLOGRAPH RIGHT SIDE

13. When installing paper supply in oscillograph, make certain flange is on the right as operator faces instrument. Press in on right end and slide paper supply into position, making certain shaft is completely seated.

14. Unroll approximately two feet of chart paper and lower paper drag assembly to rest on supply roll.

15. Place the writing table under the unrolled portion of paper, making certain paper is flat against the table and carefully install writing table into position. Avoid touching pens. Press down firmly until snap catch is engaged.

NOTE: The writing table interlock switch will prevent operation of the instrument unless snap catch is engaged.

16. Feed chart paper down into chute between pressure and drive rolls and out front of oscillograph.

17. Pull paper taut and flat over writing table and reset pressure roller.

18. Check that the paper edges are an equal distance from the side plates at the right and left event pens and that the event marker pens are centered in the margins. A paper centering adjustment is provided on the oscillograph left side plate, but this is factory set and normally requires no readjustment. In the event adjustment is necessary, refer to Paragraph 6.10.

NOTE: Do not slide paper supply right or left on the paper supply shaft. The paper core should always be kept against the flange.

19. Operate oscillograph to run out about 10 feet of chart paper to be certain centering is correct and to allow chart tracking to stabilize.

6.6 CHART PAPER SUPPLY INDICATOR

After loading chart paper, check PAPER SUPPLY indicator. If indicator does not registor correct length of full roll as marked on chart paper roll, adjust indicator according to instructions located on right side of oscillograph.

6.7 INK SUPPLY

The ink is contained in a graduated master cylinder with an indicator to check ink supply at a glance. Normally a two-ounce supply contains sufficient ink for approximately 50 rolls of average recording. To replenish ink supply, the procedure is as follows:

1. Turn off equipment.

2. Loosen four captive thumb screws and pull oscillograph out as far as possible.

3. Unscrew cap from master cylinder (Figure 6-4 and 6-5).

4. Remove cap from ink syringe.

NOTE: Make sure ink is to tip of syringe to prevent air from entering ink system.

5. Screw syringe tip into master cylinder in a clockwise direction.

6. Inject ink into cylinder until gage on master cylinder shows just under two ounces.

CAUTION: Do not overfill pressurized inking system. This prevents inking system from returning to zero PSI when unit is turned off.

7. Unscrew syringe from master cylinder.

8. Replace cap on master cylinder.

CAUTION: Make sure gasket is in place on cap.

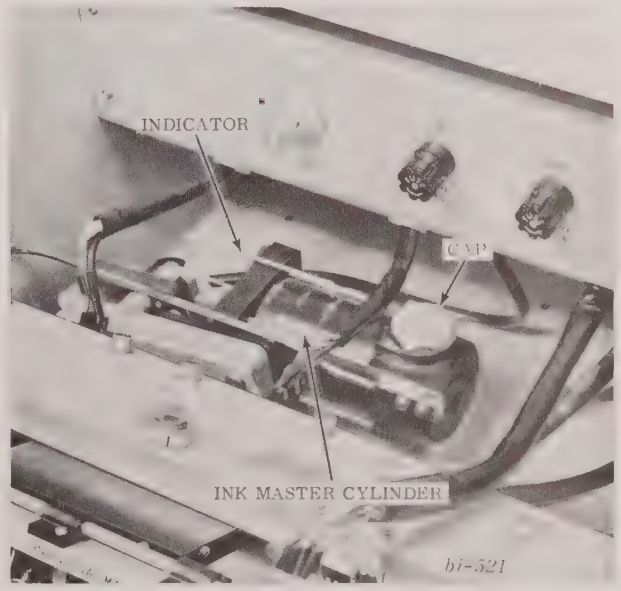

FIGURE 6-4 VERTICAL OSCILLOGRAPH INK MASTER CYLINDER

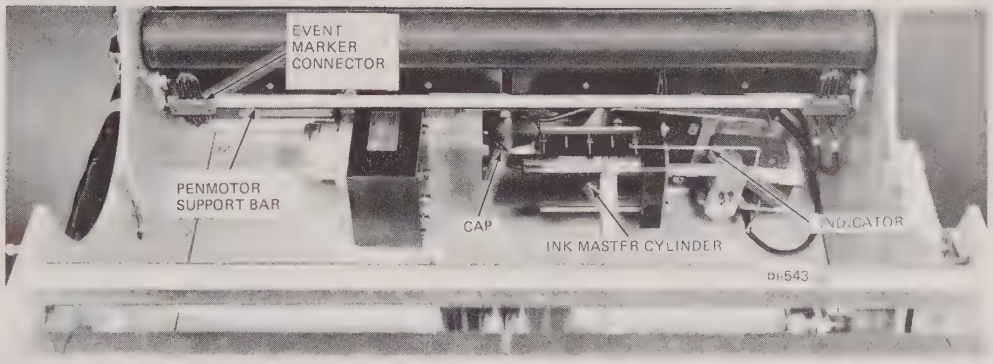

FIGURE 6-5 HORIZONTAL OSCILLOGRAPH INTERIOR - Reference View

9. Replace cap on ink syringe.

10. Install chart paper as described in paragraph 6.4 and 6.5.

11. Push oscillograph into unit and secure.

NOTE: Always keep paper under pen tips and ink in master cylinder. Do not allow unit to remain out of service for longer than four hours without ink in the cylinder.

6.8 CHART PAPER TENSION

The back tension or drag on chart paper should be enough to keep paper taut over writing edge of writing bar, but not enough to restrict chart travel. Tension should measure between 7 and 7½ pounds for the vertical oscillograph and between 5 and 12 pounds for the horizontal oscillograph.

The procedure for measuring and adjusting tension is as follows:

1. Pull paper from between drive and pressure rollers.

2. Fold corners at end of chart paper at approximately 45 degree angles to form a point at chart center.

3. Use a suitable clamp or cellophane tape and attach a spring balance scale at folded point of chart paper.

4. Pull spring balance scale parallel to writing table and ahead of drive roller. Measure tension.

5. The tension roller adjustment, located on left side of oscillograph, may be tightened or loosened to obtain required reading. (Figure 6-2)

6.9 PRESSURE ROLLER

The force holding pressure roller against drive roller should be 8 ± ¼ pounds as measured at ends of pressure roller shaft. (See Figure 6-6.) The procedure for measuring and adjusting roller pressure is described below and is the same for both the vertical and horizontal oscillographs.

1. Release bezel lock on front of oscillograph.

2. Remove chart paper from between drive and pressure rollers.

3. Insert a small sample piece of chart paper between pressure roller and drive roller.

NOTE: A separate paper sample must be between each side of drive and pressure rollers before any measurement or adjustment can be made.

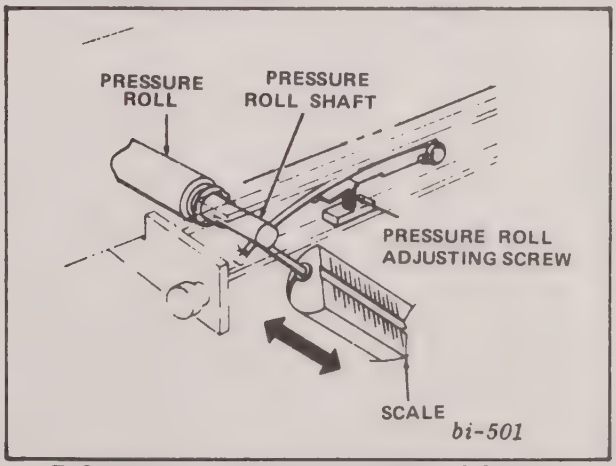

FIGURE 6-6 VERTICAL OSCILLOGRAPH PRESSURE ROLLER ADJUSTMENT

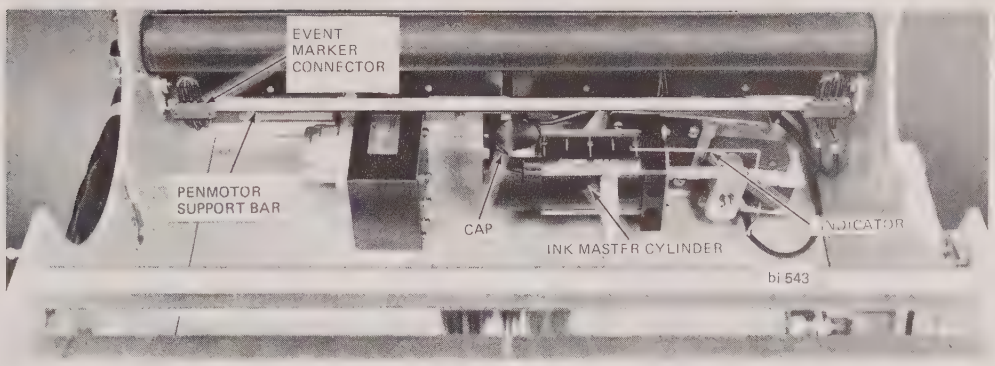

FIGURE 6-5 HORIZONTAL OSCILLOGRAPH INTERIOR - Reference View

9. Replace cap on ink syringe.

10. Install chart paper as described in paragraph 6.4 and 6.5.

11. Push oscillograph into unit and secure.

NOTE: Always keep paper under pen tips and ink in master cylinder. Do not allow unit to remain out of service for longer than four hours without ink in the cylinder.

6.8 CHART PAPER TENSION

The back tension or drag on chart paper should be enough to keep paper taut over writing edge of writing bar, but not enough to restrict chart travel. Tension should measure between 7 and 7½ pounds for the vertical oscillograph and between 5 and 12 pounds for the horizontal oscillograph.

The procedure for measuring and adjusting tension is as follows:

1. Pull paper from between drive and pressure rollers.

2. Fold corners at end of chart paper at approximately 45 degree angles to form a point at chart center.

3. Use a suitable clamp or cellophane tape and attach a spring balance scale at folded point of chart paper.

4. Pull spring balance scale parallel to writing table and ahead of drive roller. Measure tension.

5. The tension roller adjustment, located on left side of oscillograph, may be tightened or loosened to obtain required reading. (Figure 6-2)

6.9 PRESSURE ROLLER

The force holding pressure roller against drive roller should be 8 ± ¼ pounds as measured at ends of pressure roller shaft. (See Figure 6-6.) The procedure for measuring and adjusting roller pressure is described below and is the same for both the vertical and horizontal oscillographs.

1. Release bezel lock on front of oscillograph.

2. Remove chart paper from between drive and pressure rollers.

3. Insert a small sample piece of chart paper between pressure roller and drive roller.

NOTE: A separate paper sample must be between each side of drive and pressure rollers before any measurement or adjustment can be made.

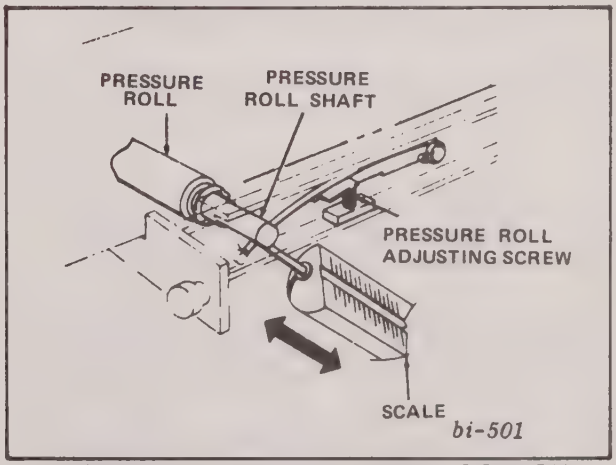

FIGURE 6-6 VERTICAL OSCILLOGRAPH PRESSURE ROLLER ADJUSTMENT

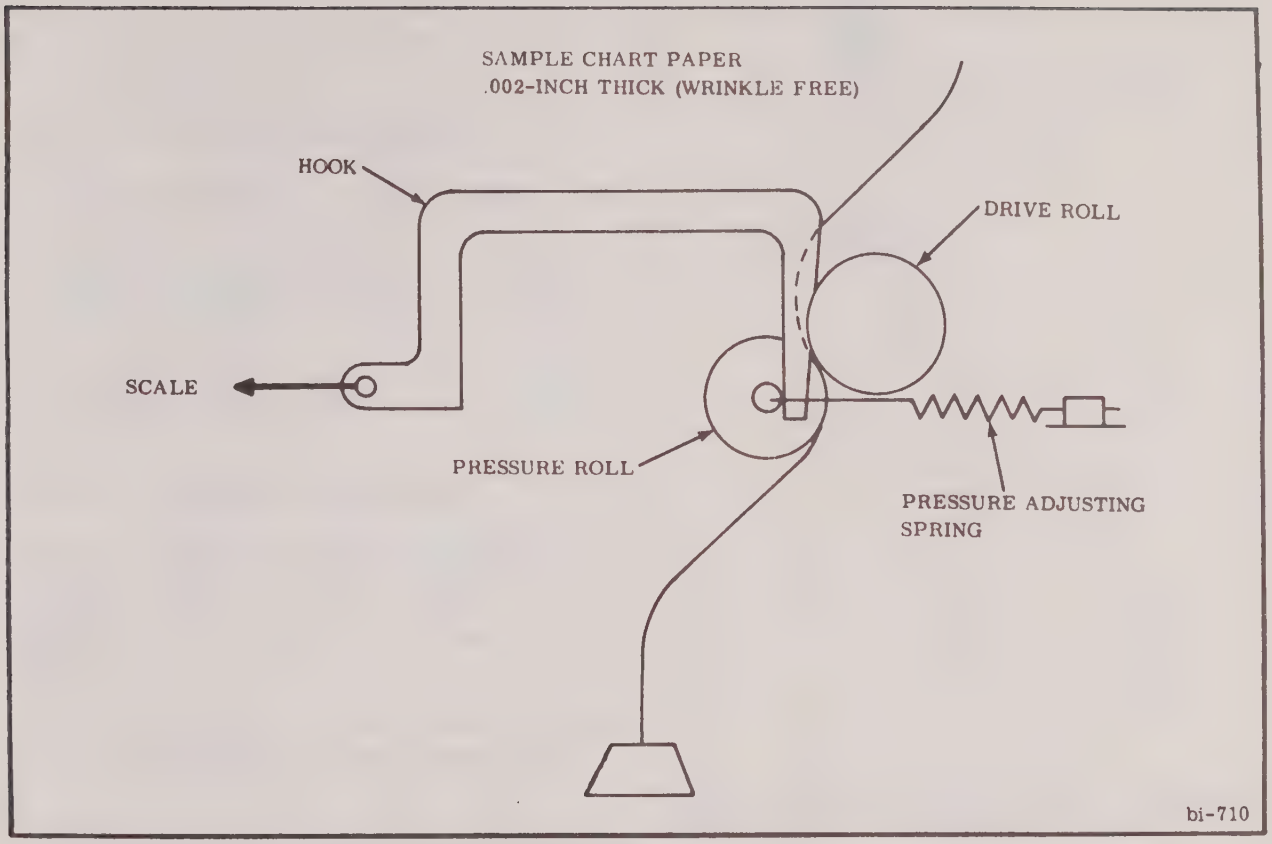

FIGURE 6-7 HORIZONTAL OSCILLOGRAPH PRESSURE ROLLER ADJUSTMENT

4. Engage bezel lock.

5. Hook scale around right end of pressure roller shaft and pull in direction shown in Figure 6-7.

6. Gently pull paper sample on right side at same time as scale.

7. Paper sample should release when scale reading is 8 ± ¼ pounds.

8. If scale reading indicates adjustment is necessary, turn adjusting screw (Figure 6-7) until proper reading is obtained.

9. Repeat measurement on left end of pressure roller shaft making certain sample paper is between both rollers.

10. Adjust left side in the same manner.

6.10 PAPER CENTERING AND TRACKING

1. Check that chart edges are equal distances, within .03 inch, from side plates and that event marker pens are centered in margins. The paper centering adjustment is provided on oscillograph left side plate. (Figure 6-2).

NOTE: Do not slide paper supply right or left on paper supply shaft. The paper core should always be kept tightly against flange.

2. By turning the adjustment clockwise the paper moves to the right. Counterclockwise will make the paper move to the left.

3. Operate oscillograph to run out about 10 feet of chart paper to be certain centering is correct and to allow chart tracking to stabilize.

4. Operate oscillograph at 20 millimeters per second and run out 20 feet of chart paper.

5. Chart wander should not exceed .025 inch as paper passes over writing bar. Use event marker trace to chart edge for reference.

6. If chart wander exceeds .025 inch refer to Paragraphs 6.8 and 6.9.

6.11 CHART SPEED MEASUREMENT

1. Operate oscillograph at 200 millimeters per second.

2. Measure distance chart moved during one second pulses of event marker.

3. Distance should be one meter ± 2.5 millimeters. Accuracy of chart speed should be within ± 0.25%.

6.12 PEN PRESSURE MEASUREMENT

Analog or event marker pen pressure should be checked if the ink trace is excessively wide (bleeding), indicating low pen pressure or if pen gouges the chart paper, indicating excessive pen pressure.

NOTE: Wide trace may also indicate an improperly lapped pen. Refer to Paragraph 6.14 for pen lapping procedures.

The gram gage (part number 240601-910) is used to measure the pressure of the analog and event marker pens as follows:

1. Turn ON recorder and set chart SPEED at 5 mm/sec.

2. Place gram gage hook under pen shaft, as close as possible to the tip, and form a right angle to the pen shaft with the gage body. (Figure 6-8)

3. Pull pen from chart as shown in Figure 6-8, and take reading on gage the moment excessive ink starts to flow from pen.

4. Proper pressure for analog pens is 30 ±2 grams, for event marker pen 25 ±2 grams.

5. If pen pressure is not within specified limits, adjust pressure using special pen adjustment wrench (Gould part number 1-120922-18). Refer to Figure 6-9. Turn screw clockwise to increase pressure, counterclockwise to decrease pressure.

NOTE: When pens are replaced, pen pressures must be checked and if required adjusted per above.

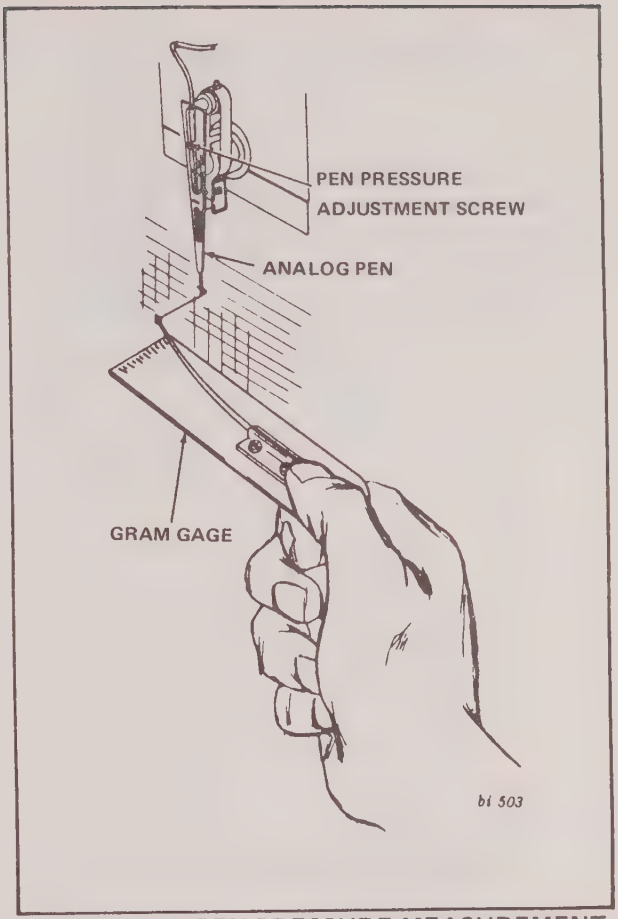

FIGURE 6-8 PEN PRESSURE MEASUREMENT

6.13 PEN PRESSURE ADJUSTMENT

Occasionally analog and event marker pens may require adjustment. This is indicated by wide ink traces (insufficient pen pressure) or damage to the chart paper at the pen tip (excessive pen pressure). Pressure adjustments of both analog and event marker pens are described below.

1. Load chart paper into oscillograph. Refer to Paragraph 6.4 or 6.5.

2. Connect oscillograph to correct power source.

3. Select a slow chart speed.

4. Measure pen pressure (Paragraph 6.12).

5. Adjust as required. Turn pen pressure adjustment screw clockwise to increase pressure or counterclockwise to decrease pressure. (Figure 6-9)

6. Recheck pen pressure with gram gage and continue adjustment until proper reading is obtained.

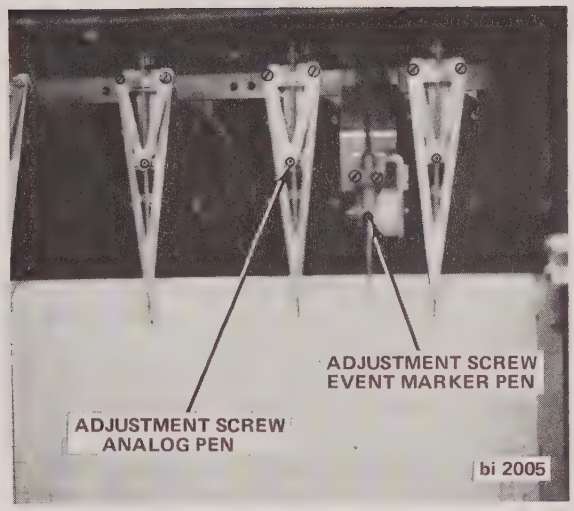

FIGURE 6-9 PEN PRESSURE ADJUSTMENT

6.14 PEN LAPPING

a. General

This paragraph describes and illustrates the proper procedures for lapping the analog and event pens. Intermittent or "wet" ink trace are indications that pen pressure is incorrect or that pen requires lapping. Check for "wet" writing by operating the recorder (no signal applied). Check pen trace by wiping index finger, with moderate pressure, across trace approximately one inch below pen tip. If ink does not smear, pen is properly lapped. If trace smears, check and adjust pen pressure (Paragraph 6.12). Repeat test, and if trace continues to smear, lapping is required.

b. Analog Pens

CAUTION: Lapping should only be done when absolutely necessary. Excessive lapping will shorten pen life.

1. Turn OFF oscillograph.

2. Carefully raise pen tip just enough to slide a small strip of emery paper (600A, Gould part number 669234) under pen tip.

3. Refer to Figure 6-10. Hold emery paper flat against writing table and move it in a circular motion several times while gently pressing pen tip with finger.

4. Remove emery paper and clean debris from pen tip. Operate oscillograph at 5 mm/sec chart SPEED.

5. Check pen trace by wiping index finger, with moderate pressure, across trace about one inch below pen tip. If ink does not smear, pen is properly lapped. If ink smears, check pen pressure per Paragraphs 6.12 and 6.13.

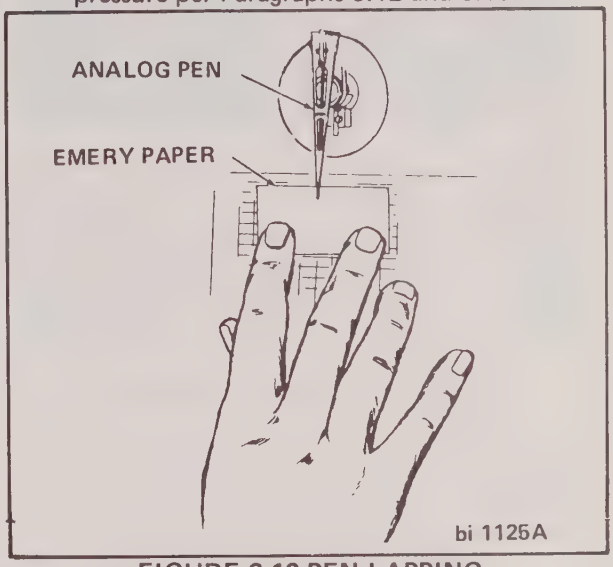

FIGURE 6-10 PEN LAPPING

6. Repeat lapping procedure if necessary.

7. If pen tip should become blocked during lapping operation, touch pen at top of pen (above tip) with a hot soldering iron for a few seconds with the pen tip raised slightly off the paper. This will usually start ink flowing and flush out abrasive.

8. When ink trace is dry, turn oscillograph off.

c. Event marker Pens

1. Connect oscillograph to correct power source.

NOTE: It is necessary for the oscillograph to be operating in order to lap event marker pens.

2. Place a small strip of emery paper, supplied with unit, under pen tip and hold in place.

3. Select a slow chart speed and allow to operate for 20 to 30 seconds with the event marker switch in the 1 second position.

4. Press STOP button and remove emery paper.

6.15 PEN REPLACEMENT

a. Analog Pen

NOTE: Removal and installation procedures for the 40mm and 80mm penmotor pen are identical.

1. Raise control panel on vertical oscillograph to gain access to pens. Pens are accessible on horizontal oscillograph.

2. Slide individual ink valve to OFF position.

NOTE: Each pen has an individual ink valve. Slide valve to the OFF position.

CAUTION: Do not permit ink to spill on oscillograph components. Place paper towels around area.

3. Disconnect pen tubing at manifold.

CAUTION: Do not pull tubing from manifold as this may damage manifold. Carefully work tubing down and then slide from manifold.

4. Loosen two screws (do not remove) which secure pen to drive arm and carefully slide pen off in downward or forward motion. (Figure 6-11).

NOTE: If pen does not readily slide off, it may be necessary to loosen pen pressure adjustment screw also.

5. Carefully slide new pen onto drive arm. Snug the two screws to secure pen.

6. Install new ink tubing between manifold and pen.

7. Slide ink valve to ON position.

8. Turn oscillograph ON and run at a chart speed of 5 mm/sec.

9. Carefully lift pen slightly and allow ink to bleed through pen tip.

10. Shut down oscillograph.

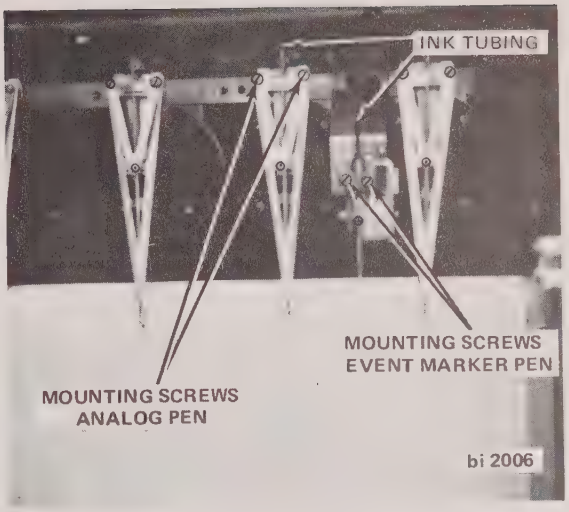

FIGURE 6-11 PEN REPLACEMENT

11. Gently grasp pen near hub and move pen across entire channel. If trace is not parallel to a horizontal line and/or pen is not on same line as other pens, turn pen in screw slots and slide pen vertically. Tighten screws.

12. Lap and set pen pressure per Paragraphs 6.13 and 6.14 if necessary.

b. Event Marker Pen

1. Raise control panel on vertical oscillograph to gain access to pens. Pens are accessible on horizontal oscillograph.

2. Slide individual ink valve to OFF position.

CAUTION: Do not permit ink to spill on oscillograph components. Place paper towels around area.

3. Disconnect pen tubing at manifold.

CAUTION: Do not pull tubing from manifold as this may damage manifold. Carefully work tubing down and then slide from manifold.

4. Loosen adjustment screw and two screws which secure pen to arm, and carefully slide pen off in downward motion. (Figure 6-11).

NOTE: If pen does not readily slide off, it may be necessary to loosen pen pressure adjustment screw.

5. Carefully slide new pen onto arm. Snug screws to secure pen. (Pen should be perpendicular to writing surface.)

6. Install new ink tubing between manifold and pen.

7. Slide ink valve to ON position.

8. Turn oscillograph ON and run at a chart speed of 5 mm/sec. Adjust pen ZERO to set pen on event gridline.

9. Carefully lift pen slightly and allow ink to bleed through pen tiip.

10. Shut down oscillograph.

11. If pen tip is not on same line as other pens, loosen screws and slide pen vertically. Tighten screws.

12. Lap and set pen pressure per Paragraphs 6.13 and 6.14 if necessary.

6.16 PEN CLEANING

In the event that a pen should fail to write or displays intermittent writing it may be caused by a clogged pen. The procedure outlined below is intended as a guide to flush the pens, but may not always prove effective:

1. Turn off recorder

2. Close ink valve on affected channel.

3. Remove ink tubing from ink manifold. Should brass nipple pull out of ink valve when removing ink tubing, clean and re-insert in valve.

4. Remove pen from penmotor (Paragraph 6.15).

5. Modify hypodermic needle per Figure 6-12.

6. Attach modified needle onto 2 cc hypodermic syringe.

7. Insert needle into pen tubing.

8. Immerse pen tip in cleaning agent. (Isopropyl Alcohol, Cell-O-Solve or equivalent).

9. Back-flush, using syringe plunger.

NOTE: It may be necessary to allow the pen to remain in the cleaning agent to dissolve dried ink at the tip.

10. Install pen (Paragraph 6.15).

NOTE: Clogging of pens occurs only when proper adjustment, operation and/or handling has not been adhered to.

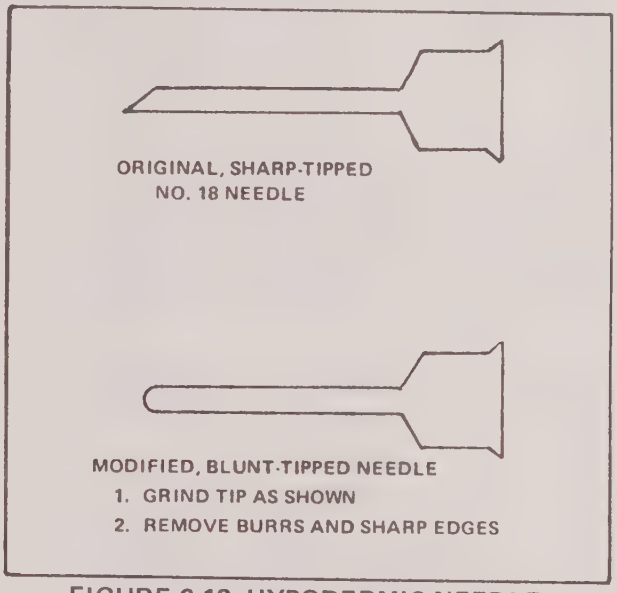

FIGURE 6-12 HYPODERMIC NEEDLE MODIFICATION

6.17 MAINTENANCE TIPS ON INK SYSTEM

The following tips are supplementary to the maintenance procedures described in this section and are recommended for maximum performance and trace quality.

1. Never allow water to enter the inking system or pen. It can precipitate the dye out of the ink and cause clogging. For cleaning use ethyl alcohol or an ethylene glycol ether compound.

2. If ink accumulates at the pin tip after chart drive is shut off and pen tip is raised, there is probably air in the lines. Air can enter when a pen is changed or the writing table is left open and will cause skipping of the trace. To eliminate this, run chart at a slow speed and lift the pen tip away from the chart slightly. Allow ink to bleed until air pockets have escaped from the pen tip. Wipe the excess ink with a tissue stroking towards chart center to avoid staining the writing table.

3. When replacing plastic ink tubing after changing a pen or ink cartridge, be sure the tubing fits snugly over the mating parts. Damaged tubing, or tubing with ink on it can cause trouble. Ink acts as a lubricant and may cause a loosely fitted tube to slip off.

4. Never use the shut-off valves in the system to throttle ink flow. They are intended to be either fully open or closed. Also it is best not to shut off ink to unused channels because the ink lubricates and reduces pen tip wear and prevents paper particles from clogging the pen.

5. Always store the recorder with the pen tip against the paper, for exposure to the atmosphere will dry the ink at the tip. Should this occur, simply operate the chart drive and heat the pen tip with a soldering iron and lift the pen slightly to allow the dried ink to flush out. Should this fail to unclog the pen, refer to the paragraph on pen cleaning in this section.

CAUTION: Do not use an open flame to perform this operation as the ink is flammable.

6. Should the need arise to clean up any ink after changing pens or filling ink reservoir, the recommended ink remover is: Anchor Hand Cream, No. 25, obtainable from Anchor Office Supply, Cleveland, Ohio

6.18 REPLACING PENMOTOR DRIVE BAND (685270, 40mm or 684999, 80mm)

NOTE: Illustration shown is that of 40mm drive band, but replacement procedure for 80mm is essentially the same.

CAUTION: It is recommended that the drive band be replaced at the factory so that proper band tension is maintained. Should field replacement become necessary, perform the following steps.

NOTE: Refer to Figure 6-13 for location of parts in capital letters.

a. Band Removal

1. Remove Analog Pen Assembly.

2. Loosen (but do NOT remove) screws securing REAR BAND CLAMP.

3. Remove screw from front end of assembly. (FRONT BAND CLAMP will fall away from assembly with screw.)

4. Remove band by sliding free end in counter-clockwise direction thru BAND ANCHOR and REAR BAND CLAMP; then over TRANSITION PIECE attached to drive arm assembly.

5. Conclude removal by gently pulling band from BAND ANCHOR.

b. Band Replacement

1. Place hooked (or bent) end of DRIVE BAND over BAND ANCHOR as shown, and restring in clockwise direction over TRANSITION PIECE, and between BAND ANCHOR and REAR BAND CLAMP. Slot in DRIVE BAND should line up with hole in TRANSITION PIECE.

2. Replace screw and FRONT BAND CLAMP. Snugly tighten all screws, front and rear.

3. Apply 5.5 to 6.5 lbs of tension to free end of band with spring tension scale or other means.

4. Maintaining tension, fully tighten all screws and apply Glyptal cement (Gould P/N 11370) or equal at screwheads and mating surfaces.

5. Remove tension; then replace analog pen.

6. Check frequency response for compliance with specifications given in Section I.

6.19 FUSE REPLACEMENT

Fuses are located on the Timer Control Board assembly located in the Drive Amplifier frame, on the Main Connector panel, on the fuse panel in the vertical oscillograph, and on the bracket housing J-701 in the horizontal oscillograph. The fuse panel and the bracket (J-701) are both located in the vicinity of the ink pump assembly. Fuse symbols, ratings and part numbers follow.

1. Timer Control Board Assy
   a. F-101 thru F-108, 3/4 Amp P/N 116198-9.
   b. F-109, 1/4 Amp, P/N 116198-6.
2. Main Connector Panel
   a. F-1, 10 Amp, P/N 113182-10.
   b. F-2, 5 Amp, P/N 116198-14.
3. Fuse Panel or J-701 bracket.
   a. F-701, 3 Amp, P/N 102625-9.
   b. F-702, 1/2 Amp, P/N 116198-8.

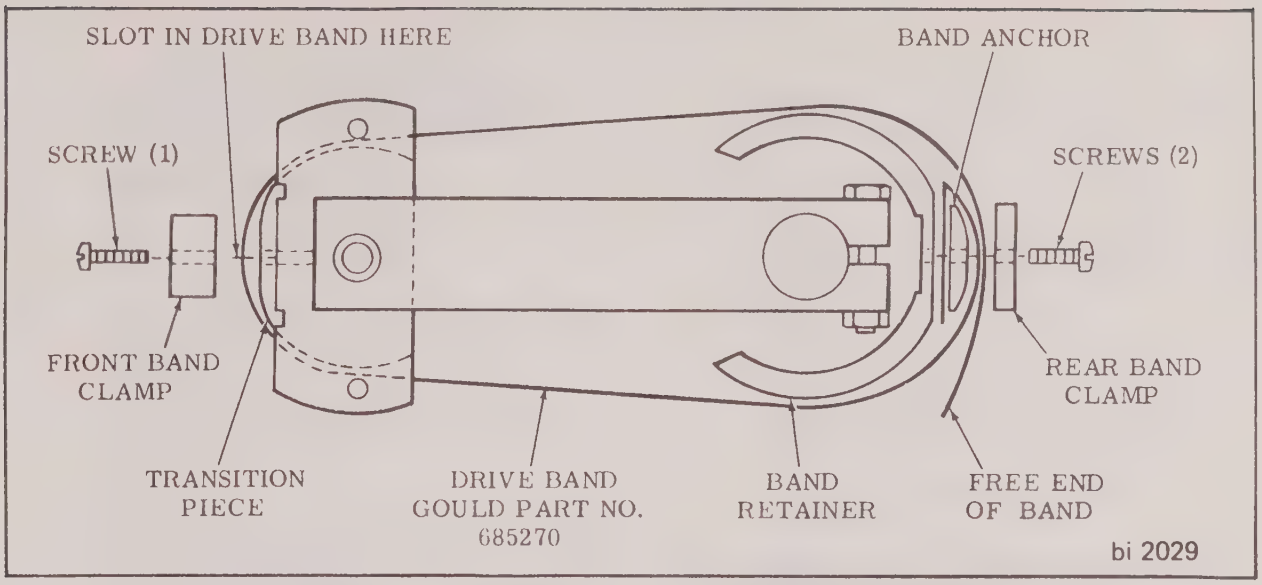

FIGURE 6-13 PENMOTOR DRIVE BAND REPLACEMENT

6.20 MULTI-CHOICE TIMER

a. General

The multi-choice timer, Model 11-2101-40, consists of two inter-geared cams driven by a synchronous motor, with each cam triggering separate switches. One cam rotates once per second and, thru its switch, energizes event marker with a 100 millisecond pulse at one second intervals. The selector cam produces a similar pulse every 10, 20, 30, or 60 seconds. Thus, depending upon position which is selected manually, there are 9 deflections to right, 1 to left, or 19 right and 1 left, or 29 right and 1 left, or 59 right and 1 left.

b. Setting Timer

1. Press oscillograph STOP button.
2. Turn off instrument.
3. Remove rear cover from oscillograph.
4. Disconnect timer leads from terminals 1, 2, 4, 5 and 6 at rear of oscillograph.
5. Press release lever and pull oscillograph out as far as possible.
6. Remove paper supply roll (Paragraph 6.4 or 6.5).
7. Remove two timer mounting screws from underside of oscillograph and remove timer from inside oscillograph.
8. Remove four screws and lockwashers and remove cover from timer.
9. Remove screw securing selector cam in position.
10. Rotate selector cam to choice of setting (10, 20, 30, or 60 seconds).

NOTE: The 10 second position on the event marker switch changes to the setting on the timer.

11. Install screw to lock selector cam in position.
12. Replace cover and install four screws and lockwashers.
13. Position timer in oscillograph and secure with two screws installed from underside of oscillograph.
14. Connect leads to terminals at rear of oscillograph as follows:

Terminal	Lead Color
1	Black
2	Black
4	Yellow
5	Green
6	Blue

15. Install paper supply roll (Paragraph 6.4 or 6.5).
16. Slide oscillograph back into unit.

6.21 INKING SYSTEM REPLACEMENT – HORIZONTAL OSCILLOGRAPH

a. Preliminary Procedures

1. Remove power from UNIT.
2. Press release lever on each side of oscillograph and slide out oscillograph as far as possible.
3. Slide ALL manifold valves to the "OFF" position.
4. Open both side covers, release pressure roller lever on right side of oscillograph, remove writing table and chart paper per paragraph 6.5.

b. Removal of Manifold and Tube assembly

1. Remove both side covers secured by three screws from outside plate under hinge and two screws on inside rear side plate.
2. Remove all pen tubes from manifold nipples.
3. Remove two screws and lockwashers securing adapter to ink reservoir.
4. Remove shoulder bolt from manifold arm.
5. Remove two screws attaching manifold assembly to the right side plate and one screw from the left side plate.
6. Remove two screws, securing the ink pump assembly, from the bottom plate of the oscillograph. (This step is necessary to allow clearance for tube assembly removal.)
7. Carefully remove manifold and tube assembly.

c. Disassembly of manifold and tube assembly.
NOTE: Refer to Figure 6-14.

1. Remove end cap, "O" ring and manifold support.
2. Loosen Allen head screw and remove manifold arm.
3. Remove two screws and lockwashers which secure the tube assembly to the manifold assembly.

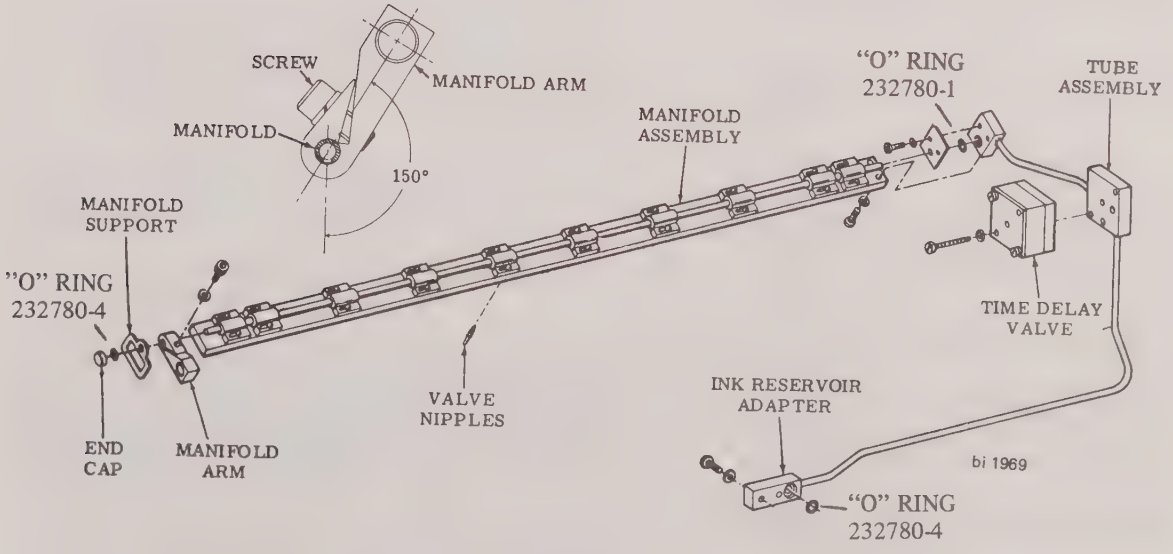

FIGURE 6-14 MANIFOLD ASSEMBLY

4. Remove ten nipples from manifold assembly.

5. Remove two screws and lockwashers and remove retainer and preformed packing from tube assembly.

6. Remove two screws and lockwashers from top of check valve assembly and remove time delay valve from mounting block.

NOTE: There are two preformed packings located between time delay valve body and mounting block.

7. Remove remaining two screws and lockwashers from time delay valve and disassemble valve.

CAUTION: DO NOT ATTEMPT FURTHER DISASSEMBLY OF ANY COMPONENT. IF DEFECTIVE, REPLACE WITH NEW COMPONENT. EXPLODED VIEW SHOWN FOR CLARITY ONLY.

d. Assembly and Installation of Manifold and Tube Assembly.

NOTE: Preformed packing should always be replaced during re-assembly see Figure 6-14 for part numbers.

1. Slide manifold arm onto manifold and locate in position as shown in Figure 6-14. Apply locktite (grade E) or equivalent to threads of screw and tighten screw to 17 in-lb ± 1 in-lb.

CAUTION: WHEN TIGHTENING SCREW, USE CARE NOT TO DISTORT MANIFOLD.

2. Assemble time delay valve as shown in Figure 6-14.

CAUTION: DURING ASSEMBLY CHECK TO BE SURE CHECK VALVE 244655 IS INSTALLED ON VALVE STEM WITH FLAT SIDE (NON-COUNTERSUNK) AGAINST SPRING, TO PREVENT POSSIBLE BINDING.

3. Insert two preformed packings in openings in back of valve assembly and attach valve assembly to mounting block with two screws and lockwashers.

4. Install preformed packing in manifold and block of tube assembly, align retainer over packing, and secure with two screws and lockwashers.

5. Slide manifold assembly into manifold end block and secure with two screws and lockwashers.

6. Install ten valve nipples into manifold assembly so that nipples extend 0.250 - inch from manifold.

7. Install preformed packing, manifold support and manifold end cap on manifold.

8. Blow out entire assembly with clean, dry air to remove all foreign particles.

9. Place manifold and tube assembly in oscillograph and secure with two screws on right side and one screw on left side.

10. Install shoulder bolt attaching manifold arm.

11. Secure check valve and mounting block to left side plate with screw, flat washer, and lockwasher.

12. Insert preformed packing in adapter and attach adapter to ink chamber with two screws and lockwashers.

e. Removal and Disassembly of Ink Supply Assembly.

1. Unplug leads to pump motor.

2. Slide all manifold valves to the "OFF" position.

3. Remove two screws and lockwashers attaching tube assembly to ink chamber.

4. Remove two screws attaching ink supply assembly and mounting bracket to oscillograph.

5. Carefully lift ink supply assembly from oscillograph.

6. Purge ink supply assembly of all ink (para. 6.22.

7. Remove four screws and lockwashers attaching bracket to ink supply assembly.

8. Remove set screw securing pointer to piston.

9. Remove four nuts, four lockwashers and two flat washers and remove pointer guide and pointer.

10. Separate ink cylinder assembly from plate.

11. Remove four threaded studs from ink chamber.

12. Remove cap screw, preformed packing, and spring from ink chamber.

13. Slide piston assembly from ink cylinder and remove screw, piston cap, diaphragm, set screw and rack gear from piston.

14. Remove roll pin from spur gear.

15. Remove four screws and lockwashers and remove plate assembly and spur gear from gear head.

16. Remove two screws securing mounting plate to plate and remove mounting plate.

17. Remove straight pin along with retaining ring and guide from plate.

18. Remove retaining ring and guide from straight pin.

19. Remove roller bearing from plate.

f. **Assembly and Installation of Ink Supply Assembly**

1. Install idler bearing in plate.

2. Assemble retaining ring and guide on straight pin and install pin in plate.

3. Attach mounting plate to plate with two screws removed in d. step 16.

4. Install plate assembly with spur gear onto gear head shaft and attach plate assembly to gear head with four screws and lock washers removed in d. step 15.

5. Install roll pin in spur gear.

6. Slide rack gear (with gear teeth away from set screw hole) into piston and secure with set screw removed in d. step 13.

7. Attach diaphragm to piston with piston cap and screw, and slide piston assembly into ink cylinder.

NOTE: Check to be sure pointer set screw hole in piston is aligned with access hole in ink cylinder.

8. Install spring preformed packing and cap screw in ink chamber.

9. Install four threaded studs in ink chamber and attach chamber assembly and cylinder assembly to plate assembly with two lock-washers and nuts.

10. Assemble pointer and pointer guide and insert pointer into piston and secure with set screw removed in d. step 8.

11. Attach pointer guide to plate assembly with two nuts, lockwashers and flat washers removed in d. step 9.

12. Attach ink supply assembly to bracket with four screws and lockwashers removed in d. step 7.

13. Install ink supply assembly with bracket in oscillograph and secure with two screws, lock washers and nuts removed in d. step 4.

14. Remove tape from ink chamber and tube assembly and attach tube assembly to ink chamber with two screws and lockwashers removed in d. step 3.

15. Connect two leads to pump motor.

16. Bleed and fill ink supply assembly (Refer to Para. 6.23).

6.22 INKING SYSTEM REPLACEMENT - VERTICAL OSCILLOGRAPH

a. Preliminary Procedures

Perform the following steps before beginning removal.

1. Turn main power switch to OFF position.
2. Press oscillograph STOP button.
3. Loosen four captive screws securing oscillograph in unit and pull oscillograph out as far as possible.
4. Raise oscillograph control panel.

b. Removal and Disassembly of Manifold and Tube Assemblies

NOTE: Refer to Figure 6-14.

1. Remove two screws and lockwashers securing adapter to ink reservoir.
2. Remove preformed packing from adapter.
3. Remove screw, flat washer and lockwasher from left side plate securing check valve and mounting block to side plate.
4. Remove shoulder bolt attaching manifold arm to actuating arm.
5. Remove two screws from outside of right side plate and one screw from left side and remove manifold and tube assembly and manifold support.
6. Loosen screw and remove manifold arm from manifold.
7. Remove two screws and lockwashers and separate tube assembly and manifold assembly.
8. Remove ten valve nipples from manifold assembly.
9. Remove two screws and lockwashers and remove retainer and preformed packing from tube assembly.
10. Remove two screws and lockwashers from top of check valve assembly and remove time delay valve from mounting block.

NOTE: There are two preformed packings located between time delay valve body and mounting block.

11. Remove remaining two screws and lockwashers from time delay valve and disassemble valve.

CAUTION: DO NOT ATTEMPT FURTHER DISASSEMBLY OF ANY COMPONENT. IF DEFECTIVE, REPLACE WITH NEW COMPONENT. EXPLODED VIEW SHOWN FOR CLARITY ONLY.

c. Assembly and Installation of Manifold and Tube Assembly

1. Slide manifold arm onto manifold and locate in position as shown in Figure 6-14. Apply locktite (grade E) or equivalent to threads of screw and tighten screw to 17 in-lb ±1 in-lb.

CAUTION: WHEN TIGHTENING SCREW, USE CARE NOT TO DISTORT MANIFOLD.

2. Assemble time delay valve as shown in Figure 6-14.

CAUTION: DURING ASSEMBLY CHECK TO BE SURE CHECK VALVE 244655 IS INSTALLED ON VALVE STEM WITH FLAT SIDE (NON-COUNTERSUNK) AGAINST SPRING, TO PREVENT POSSIBLE BINDING.

3. Insert two preformed packings in openings in back of valve assembly and attach valve assembly to mounting block with two screws and lockwashers.
4. Install preformed packing in manifold and block of tube assembly, align retainer over packing, and secure with two screws and lockwashers.
5. Slide manifold assembly into manifold end block and secure with two screws and lockwashers.

6. Install ten valve nipples into manifold assembly so that nipples extend 0.250-inch from manifold.

7. Install preformed packing, manifold support, and manifold end cap on manifold.

8. Blow out entire assembly with clean, dry air to remove all foreign particles.

9. Place manifold and tube assembly in oscillograph and secure with two screws on right side and one screw on left side.

10. Install shoulder bolt attaching manifold arm to actuating arm.

11. Secure check valve and mounting block to left side plate with screw, flat washer, and lockwasher.

12. Insert preformed packing in adapter and attach adapter to ink chamber with two screws and lockwashers.

d. Removal and Disassembly of Ink Supply Assembly

NOTE: Refer to Figure 6-15.

1. Disconnect harnesses from first two penmotors and move harnesses free of working area.

2. Unsolder two leads to pump motor.

3. Remove two screws and lockwashers attaching tube assembly adapter to ink chamber.

NOTE: Cover opening in tube assembly and ink chamber with tape to prevent ink leakage.

4. Remove two screws attaching ink supply assembly and mounting bracket to oscillograph.

NOTE: Hold nuts on underside of ink supply assembly to avoid dropping and/or losing them.

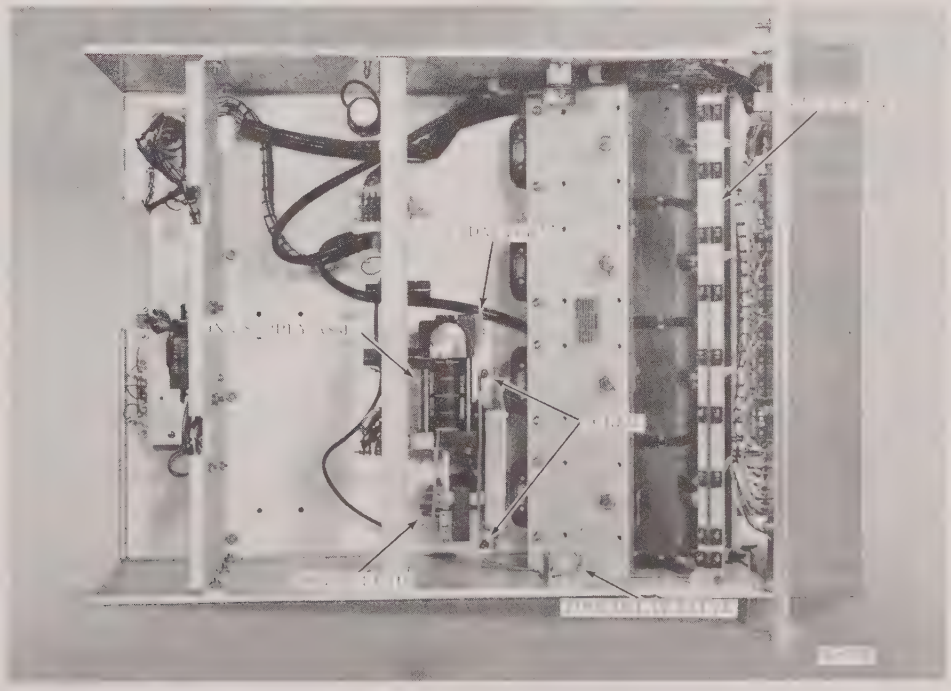

FIGURE 6-15 INKING SYSTEM - VERTICAL OSCILLOGRAPH

5. Carefully lift ink supply assembly from oscillograph.

6. Purge ink supply assembly of all ink (Para. 6-23).

7. Remove four screws and lockwashers attaching bracket to ink supply assembly.

8. Remove set screw securing pointer to piston.

9. Remove four nuts, four lockwashers and two flat washers and remove pointer guide and pointer.

10. Separate ink cylinder assembly from plate.

11. Remove four threaded studs from ink chamber.

12. Remove cap screw, preformed packing, and spring from ink chamber.

13. Slide piston assembly from ink cylinder and remove screw, piston cap, diaphragm, set screw and rack gear from piston.

14. Remove roll pin from spur gear.

15. Remove four screws and lockwashers and remove plate assembly and spur gear from gear head.

16. Remove two screws securing mounting plate to plate and remove mounting plate.

17. Remove straight pin along with retaining ring and guide from plate.

18. Remove retaining ring and guide from straight pin.

19. Remove roller bearing from plate.

e. **Assembly and Installation of Ink Supply Assembly**

NOTE: Refer to Figure 6-15 and 7-24 for assembly of ink supply assembly.

1. Install idler bearing in plate.

2. Assemble retaining ring and guide on straight pin and install pin in plate.

3. Attach mounting plate to plate with two screws removed in d, step 16.

4. Install plate assembly with spur gear onto gear head shaft and attach plate assembly to gear head with four screws and lockwashers removed in d, step 15.

5. Install roll pin in spur gear.

6. Slide rack gear (with gear teeth away from set screw hole) into piston and secure with set screw removed in d, step 13.

7. Attach diaphragm to piston with piston cap and screw, and slide piston assembly into ink cylinder.

NOTE: Check to be sure pointer set screw hole in piston is aligned with access hole in ink cylinder.

8. Install spring preformed packing and cap screw in ink chamber.

9. Install four threaded studs in ink chamber and attach chamber assembly and cylinder assembly to plate assembly with two lockwashers and nuts.

10. Assemble pointer and pointer guide and insert pointer into piston and secure with set screw removed in d, step 8.

11. Attach pointer guide to plate assembly with two nuts, lockwashers and flat washers removed in d, step 9.

12. Attach ink supply assembly to bracket with four screws and lockwashers removed in d, step 7.

13. Install ink supply assembly with bracket in oscillograph and secure with two screws, lock washers and nuts removed in d, step 4.

14. Remove tape from ink chamber and tube assembly and attach tube assembly to ink chamber with two screws and lockwashers removed in d, step 3.

15. Solder two leads to pump motor and connect harnesses to first two penmotors.

CAUTION: ATTACH STRIPED LEAD TO UPPER TERMINAL OF PUMP MOTOR.

16. Bleed and fill ink supply assembly (refer to para. 6-23).

6.23 BLEEDING INKING SYSTEM

a. General

The system must be free of air to eliminate sponginess which could prevent quick pressure release and interfere with the intended operation of time delay valve. A vent screw has been provided at the high point in the system which is at top of time delay valve.

b. Time Delay Valve Operation

The time delay valve opens when pressure is applied at master cylinder and closes a few minutes after pressure is removed. This action permits ink pressure to drop fully before the valve seals the system. Sealing prevents ink in lines from draining back into master cylinder and drawing air through pen tips into inking system.

c. Procedure

1. Slide manifold valves to OFF position.
2. Disconnect ink tubes from manifold valves.
3. Fill ink cylinder (refer to para. 6.7).
4. Slide manifold valve at end farthest from ink cylinder to ON position, leaving other valves in OFF position.
5. Place a suitable container under open ink valve to collect ink when pressure is applied.
6. Apply power to ink pump motor.
7. Allow ink to fill manifold and escape at open valve until only ½-oz remains in cylinder, then shut off open valve.

NOTE: It may be necessary to rotate manifold tube for ink to flow.

8. Open remaining valves, one at a time, starting at end farthest from ink cylinder. Allow a few drops of ink to be purged from each valve into a suitable container to remove air.
9. Loosen vent screw (slowly) at top of time delay valve and bleed any air which may have collected. Wipe off ink which collects around vent screw and continue to bleed until air is completely dispelled. Tighten screw.
10. Note position of indicator on cylinder and shut off power to pump motor. Indicator should move backward less than 1/64-inch, if all air is out of system.
11. Add ink to system until indicator is at STOP-FILLING line on cylinder. Tighten filler cap before energizing pump motor.

6.24 CHART DRIVE ASSEMBLY REMOVAL - HORIZONTAL OSCILLOGRAPH

a. Preliminary

1. Remove power from UNIT.
2. Press release levers and pull oscillograph out as far as possible.
3. Open both side covers.
4. Release pressure roller lever on right side of oscillograph.
5. Remove writing table and chart paper.

NOTE: If unit is equipped with chart take-up it will be necessary to remove the paper shaft assembly and threaded spacer leaving total access to the front of oscillograph.

b. Chart Drive Removal

1. Remove both side panels secured by three screws outside plate under hinge and two screws from inside rear.
2. Remove oscillograph control panel secured by two flat head screws upper front of panel.
3. Remove four screws and lockwashers (two sets each side) and remove upper paper chute from front of oscillograph.
4. Remove two flat-head screws from front and two pan-head screws and lockwashers (one set each side) and remove lower paper chute from oscillograph.

5. Tag for identification and remove transmission and motor lead terminals 6 thru 14 from terminal board TB-703.

6. Through holes in left side plate, remove three socket-head screws and lockwashers attaching transmission to transmission mounting plate.

7. Remove two socket-head screws and lockwashers attaching drive assembly connecting bar.

8. Carefully remove drive assembly by sliding to the right to clear the transmission pinion gear and lifting the motor side up and turning 90° counterclockwise.

6.25 INSTALLATION OF CHART DRIVE ASSEMBLY - HORIZONTAL OSCILLOGRAPH

1. Carefully install drive assembly in oscillograph so not to damage transmission drive gears.

2. Install, but do not tighten, two socket-head screws attaching drive assembly connecting bar to oscillograph chassis.

3. Install, but do not tighten, three socket-head screws attaching transmission to transmission mounting plate.

4. Slowly tighten three socket-head screws while rotating drive roller. When drive roller rotates without binding, tighten screws.

5. Tighten two socket-head screws attaching drive assembly to chassis.

6. Attach transmission and motor leads to TB-703 as follows:

TRANSMISSION LEAD	TERMINAL
Green	6
Blue	7
Violet	8
Grey	9
White	10

MOTOR LEAD	TERMINAL
Black	11
Orange	12
Green	13
Blue	14

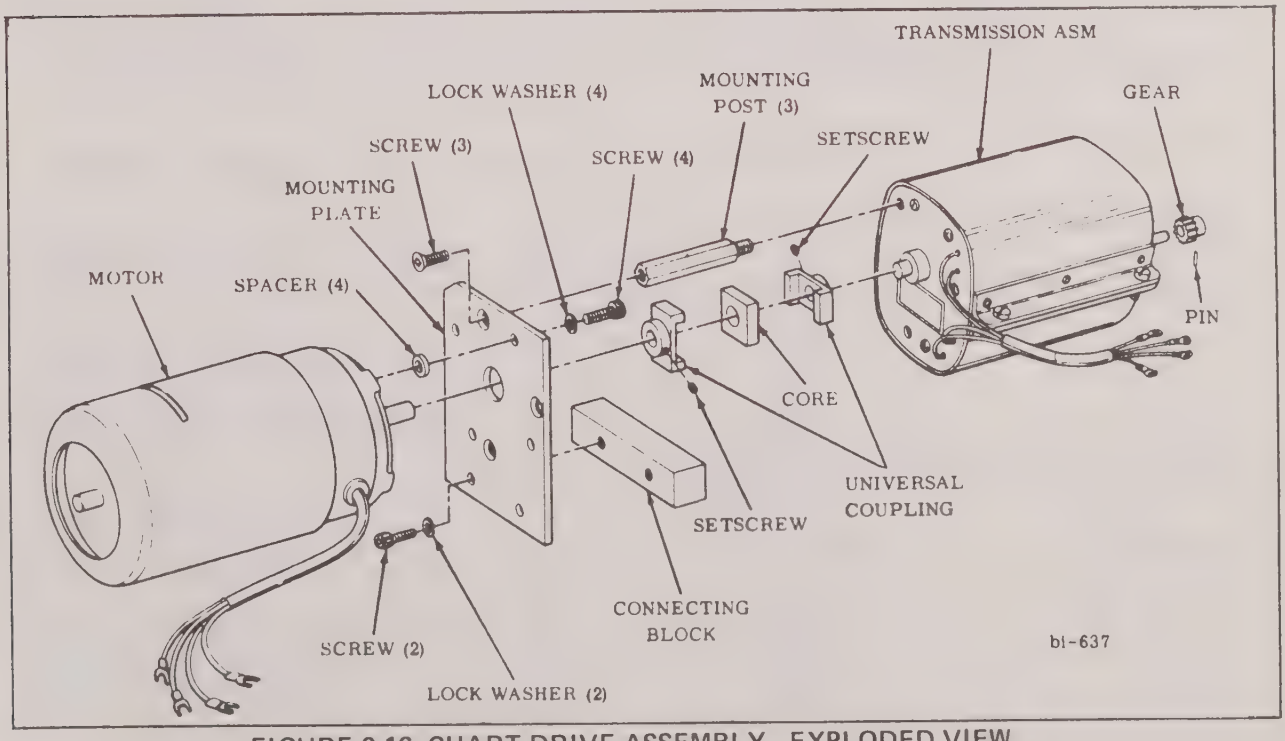

FIGURE 6-16 CHART DRIVE ASSEMBLY - EXPLODED VIEW

6.26 REMOVAL OF CHART DRIVE ASSEMBLY - VERTICAL OSCILLOGRAPH

1. Turn oscillograph power OFF.

2. Loosen four captive thumb screws and pull oscillograph out as far as possible.

3. Release bezel and pull paper drawer out to expose transmission shaft pulley (Fig. 6-17).

CAUTION: CHECK TO BE SURE RACK IS SECURED TO PREVENT TIPPING WHEN OSCILLOGRAPH IS EXTENDED.

4. Remove two set screws from pulley and slide pulley with drive belt from shaft.

5. Remove three screws, lockwashers, and flat washers attaching transmission to paper drawer left side.

NOTE: Three spacers between drawer and transmission will drop off.

6. Remove splash guard from between motor and transmission (Fig. 6-18).

7. Hold drive assembly mounting nuts on inside of paper drawer while removing two screws and flat washers from underside of paper drawer. Remove two nuts and lockwashers.

8. Disconnect leads 6 thru 14 on terminal board TB-703 on rear of oscillograph.

9. Remove complete drive assembly from paper drawer.

10. Refer to Figure 6-16 for disassembly and assembly to drive assembly.

6.27 INSTALLATION OF CHART DRIVE ASSEMBLY

a. Vertical Oscillograph

1. Position drive assembly in paper drawer.

2. Install two screws and flat washers from underside of paper drawer thru mounting block on drive assembly.

3. While holding screws, install, but do not tighten, two nuts and lockwashers on inside of paper drawer (Fig. 6-18).

NOTE: Rear mounting nut may be installed thru access hole in rear of paper drawer.

4. Install, but do not tighten, three screws, lock washers, flat washers, and spacers to attach transmission to paper drawer left side plate.

5. Fit timing belt over pulley and slide pulley onto transmission shaft (Fig. 6-18).

6. Tighten two set screws that secure pulley to transmission shaft.

CAUTION: CHECK TO BE SURE BELT IS NOT RUBBING AGAINST DRAWER OR SHROUD.

7. Adjust belt tension by pushing drive assembly toward rear of drawer and tighten transmission mounting screws.

NOTE: Tension is correct when belt can be depressed 1/8-inch at transmission pulley.

8. Tighten two drive assembly mounting screws and nuts on bottom of paper drawer.

9. Slide splash guard under threaded spacers between motor and transmission (Fig. 6-17).

10. Attach transmission leads to terminal board TB-703 as follows:

TRANSMISSION LEAD	TERMINAL
Green	6
Blue	7
Violet	8
Grey	9
White	10

11. Attach motor leads to terminal board TB-703 as follows:

MOTOR LEAD	TERMINAL
White	11
Red	12
Yellow	13
Green	14

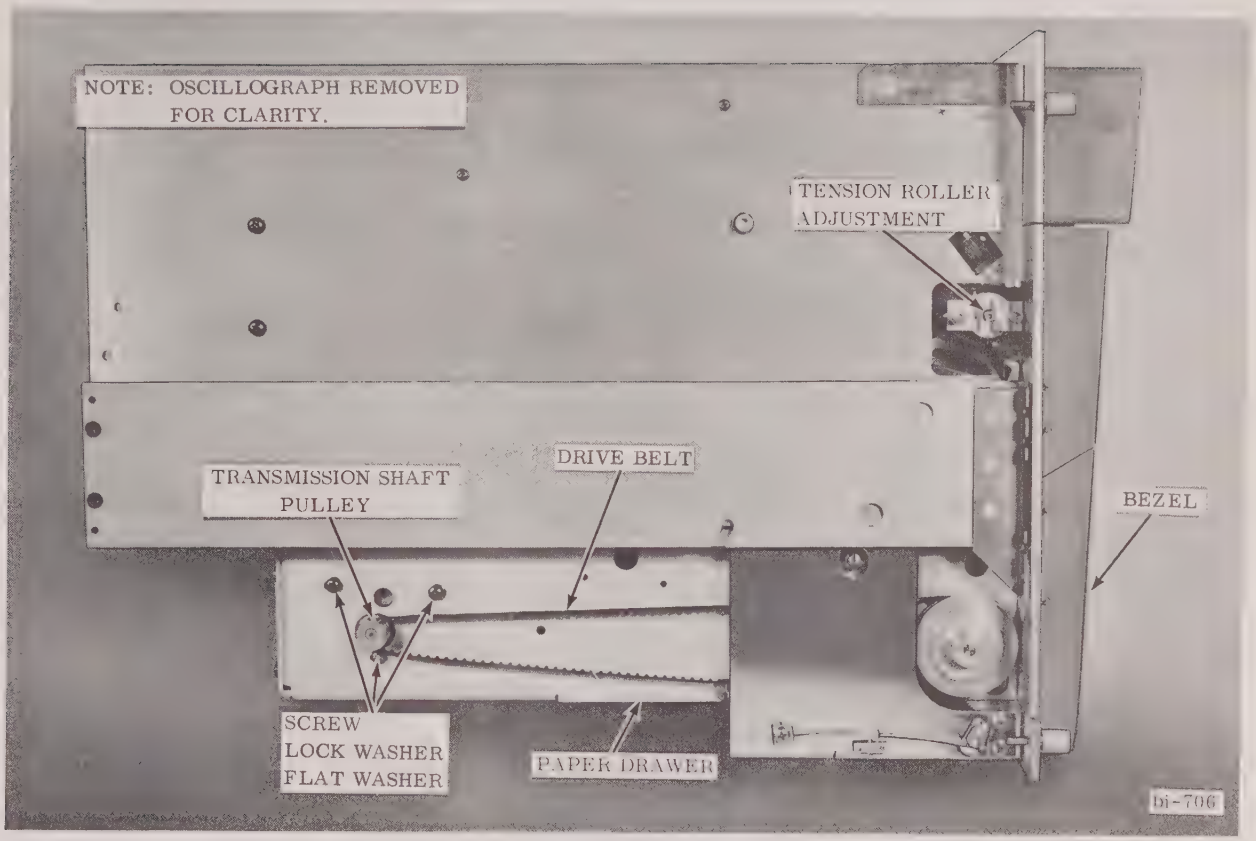

FIGURE 6-17 REMOVAL AND INSTALLATION OF CHART DRIVE ASSEMBLY (1 of 2)

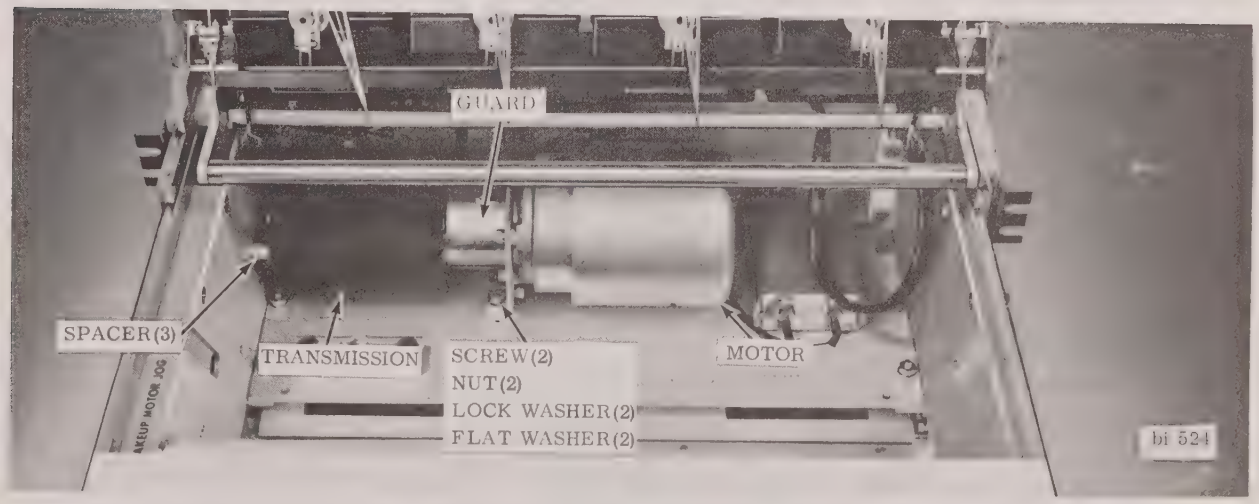

FIGURE 6-18 REMOVAL AND INSTALLATION OF CHART DRIVE ASSEMLBY (2 of 2)

6.28 TROUBLESHOOTING

This section contains two fault location tables. The tables are intended to define common problems and/or malfunctions encountered during operation and suggest the appropriate remedies to satisfy them. Should the fault not be covered here, and beyond the scope of this manual, contact your nearest Gould Service Center listed on the warranty sheet in this manual.

TABLE 6-1 GENERAL SYSTEM FAULT LOCATION

FAULT	CAUSE	REMEDY
1. Recorder inoperative.	a. Power cable not connected.	a. Connect power cable.
	b. Blown fuse, Main Connector Panel.	b. Replace fuse. (F-1 or F-2)
	c. Main POWER switch not in ON position.	c. Place switch in ON position.
	d. Interlock switch open indicating one of the following:	
	(1) Paper supply exhausted	(1) Load chart paper
	(2) Writing table not in proper position	(2) Position writing table
	(3) Faulty interlock switch	(3) Replace interlock switch
2. No power to pens. **NOTE: No power to pens is normal if chart speed STOP button is depressed.**	a. Blown fuse, on Timer Control Board.	a. Replace fuse.
3. Chart paper drive does not operate.	a. Main POWER switch not in ON position.	a. Place switch in ON position.
	b. Chart speed STOP button depressed.	b. Select proper speed.
	c. LOCAL or REMOTE button not depressed.	c. Depress proper button.
	d. Lack of power at source.	d. Connect to correct power source.
	e. Interlock switch open.	e. Check for open paper drawer or exhausted paper supply.
	f. Drive belt broken.	f. Replace drive belt.
	g. Incorrect paper tension.	g. Set paper tension.

TABLE 6-1 GENERAL SYSTEM FAULT LOCATION (Continued)

FAULT	CAUSE	REMEDY
4. Pen writes intermittently or not at all.	a. Insufficient ink supply. b. Pen clogged. c. Individual ink valve in OFF position.	a. Fill ink master cylinder. b. Clean pen. c. Slide ink valve to ON position.
5. Individual pen trace extremely heavy.	a. Improper pen pressure. b. Pen tip not fully in contact with paper.	a. Adjust pen pressure. b. Lap pen.
6. Pen tip gouges or tears paper.	Improper pen pressure.	Adjust pen pressure.
7. Pen will not travel on timing line.	Improper pen alignment.	Align pen.
8. One pen does not move or moves uncontrollably.	a. Penmotor failure. b. Apply a signal to the drive amplifiers. If pen moves normally, failure is in the preamplifier. If pen does not move, failure is in drive amplifier.	a. Plug penmotor harness from operating channel into failed penmotor. If pen does not move, penmotor defective and must be replaced. b. Refer to drive amplifier schematic wiring diagram.
9. Amplifier inoperative.	a. Blown fuse on power supplies. b. Amplifier not positioned properly.	a. Replace fuse or fuses as necessary. b. Press fully into position.
10. Any one channel stops operating.	a. One drive amplifier assembly inoperative. b. Loose connections.	a. Replace drive amplifier. b. Check all connections.
11. Any one channel stops operating.	Fuses blown on Control Timer Board (F101-F108).	Replace fuse as necessary.

TABLE 6-2 OSCILLOGRAPH FAULT LOCATION

FAULT	CAUSE	REMEDY
1. No power to pens.	Drive Amplifier Board not installed properly or making poor connection.	Check for proper installation.
2. Chart paper speed not not as indicated.	a. CR-701, CR-702, C-702 defective. (28V.D.C. power supply) b. F-702 defective.	a. Replace. b. Replace.
3. Horizontal Oscillograph will not slide properly.	Improperly adjusted slide locking mechanism.	Refer to Section II, Installation.
4. Pen will not deflect when input signal is applied.	a. Defective drive amplifier. b. Penmotor coil open (internal).	a. Refer to drive amplifier schematic or replace drive amp board. b. Replace penmotor. Refer to Gould Service Center.
5. Pen will not return to any given position (hysteresis) and appears "sluggish".	Loose pen	Refer to Section VI.
6. Penmotor movement irratic and/or abrupt or jerky.	a. Penmotor internal bearings seized (frozen). b. Penmotor drive shaft bent or damaged.	a. Replace penmotor. Refer to Gould Service Center. b. Replace penmotor. Refer to Gould Service Center.

6.29 STAR DIAGRAM (Figure 6-19)

In order to facilitate troubleshooting of the Drive Amplifier Assembly, a Signal Tracing and Replacement (STAR) Diagram is included. A STAR diagram is a block diagram, expanded to include certain wiring diagram information, schematic diagram information and engineering maintenance information (signal levels, waveforms, test points, etc). Initially, this diagram can be used in conjunction with the Theory of Operation in Section IV of this manual. As service personnel gain familiarity and exprrience with the equipment, the need to refer to the supporting descriptive text will gradually be eliminated.

The STAR diagram provides the essential information required to isolate a fault to a functional block. To use the STAR diagram, perform the Preliminary Setup procedure below. Then, by applying the scope probe to each test point in numerical order, proceed through the unit until the signal you obtain is different from the information on the diagram for that test point. Having done this, the block immediately prior to the "bad" test point indicates in which area the trouble lies. Going to that area on the board (and the schematic) components may be checked to find the failure. Be sure to verify that all power supply voltages are present and correct.

Equipment Required

1. Wavetek, Model 110 Function Generator or equivalent).
2. Gould Oscilloscope, Model OS1100 (or equivalent).
3. Drive Amp Extender Card (P/N 887526).

Procedure

1. Remove Drive Amp Board. Insert extender card in empty slot.
2. Plug Drive Amp Board to extender card. Turn on power to recorder.
3. Apply a 5v p-p, 1Hz sinewave to Drive Amp Input. (J201).
4. Make readings per test points on STAR diagram (Figure 6-19).
5. Disconnect test equipment; turn power off, make required repairs and install board.

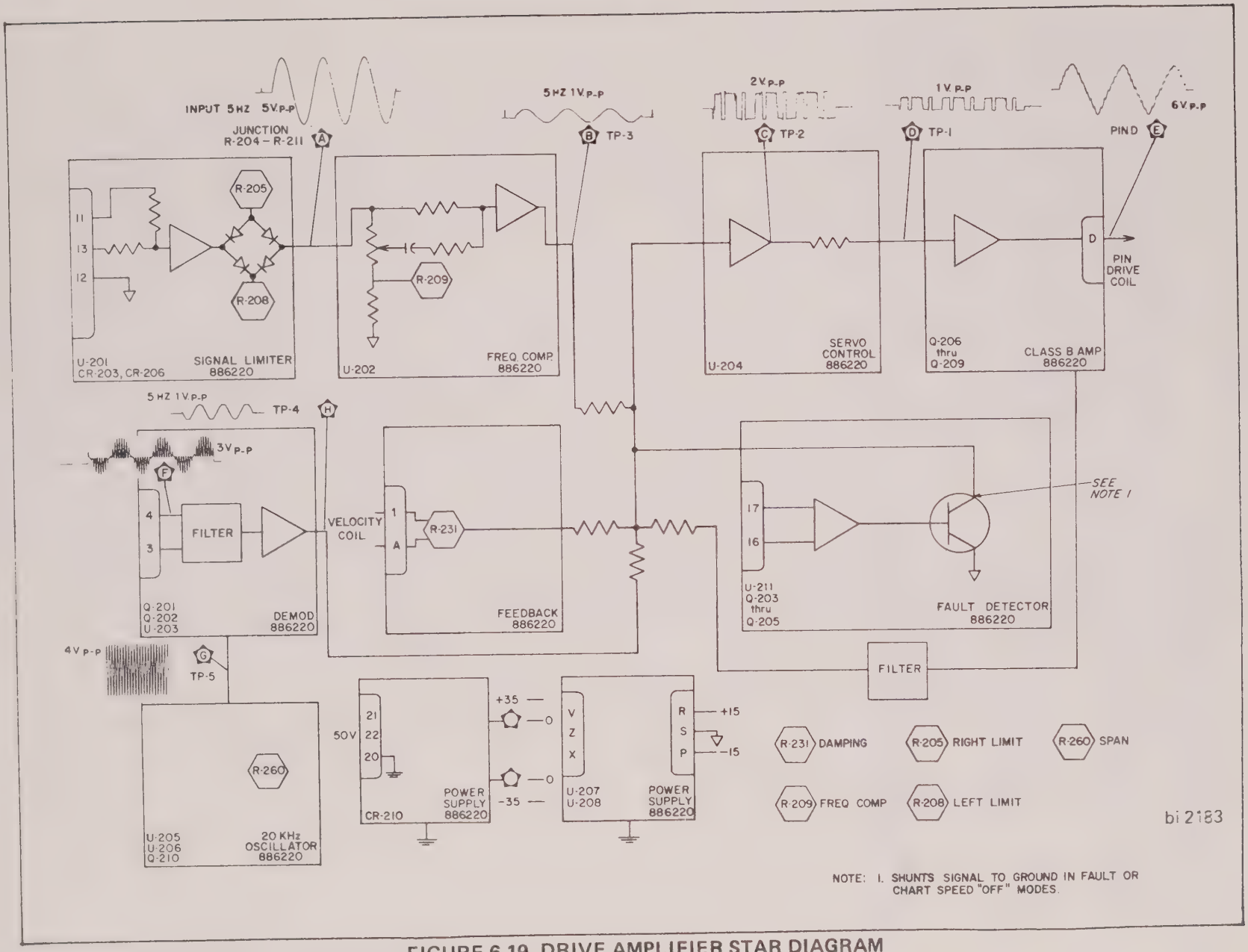

FIGURE 6-19 DRIVE AMPLIFIER STAR DIAGRAM

SECTION VII

PARTS IDENTIFICATION

7.1 GENERAL

This equipment has been accurately calibrated and adjusted before shipment from the factory and should give long, trouble-free service. For servicing beyond the scope of the instructions contained in this manual or the technical equipment available, contact your nearest Gould Service Engineer listed on the warranty card shipped with the recorder.

The following parts lists and schematic diagrams are designed to assist in servicing and repairing the equipment. For replacement parts, refer to the appropriate figures and parts lists in this section. The items listed present the lowest assembly or part, but do not necessarily imply they are for sale.

Contact your local service branch for availability of saleable components, assemblies or parts.

To assure prompt and satisfactory delivery of replacement parts, include the following with the purchase order:

1. Name and model number of the instrument.
2. Description of the part as listed in the manual.
3. Gould part number.

NOTE: Do not use the SYMBOL NUMBER from the parts list for identifying desired parts on the order.

VERTICAL SYSTEM
200 RECORDER
MODEL XXXX-1704-1XX
FIGURE 7-1

ITEM NUMBER	PART NUMBER	DESCRIPTION	SYMBOL NUMBER	USED ON
	11-1154-61	Cabinet Assembly, Vertical		
1	886985	Cabinet		
2	886986	Cover Assembly (A-P)		
	31-119998-02	Nut, Hex		
	1-216741-430	Washer, Lock		
		-- -- -- -- -- * -- -- -- -- --		
3	13-46XX-XX	Preamplifiers (*)		
3A	11-1202-15	Preamplifier Cage Kit (*) (A-P)		
	892448	Cable Assembly, Extension		
		-- -- -- -- -- * -- -- -- -- --		
3	13-4185-10	Preamplifier Assembly (*)		
3	892035	Preamplifier Assembly (*)		
3B	11-1202-27	Kit, Assembly, Rack Mount (892035) (A-P)		
	892448	Cable Assembly, Extension		
		-- -- -- -- -- * -- -- -- -- --		
3	1-461008	Blank Panel (7.00 inches) (A-P)		
	245244-02	Nut, Floating		
	248352-0218	Screw, Painted		
	249961	Spacer		
	1-261111-10	Washer, Fiber		
		-- -- -- -- -- * -- -- -- -- --		
4	892693-X	Pen Position Panel (see Figure 7-21) (A-P)		
	245244-02	Nut, Floating		
	248352-0218	Screw, Painted		
	249961	Spacer		
	1-261111-10	Washer, Fiber		
		-- -- -- -- -- * -- -- -- -- --		
5	11-1603-12	System Power Panel (see Figure 7-19) (A-P)		
	245244-02	Nut, Floating		
	248352-0218	Screw, Painted		
	249961	Spacer		
	1-261111-10	Washer, Fiber		
		-- -- -- -- -- * -- -- -- -- --		
6	XXXX-2607-71	Oscillograph, Vertical (see Figure 7-4)		
7	11-2271-2X	Z-Fold Kit (*)		
7	1-260854	Blank Panel (3.50 inches) (A-P)		
	245244-02	Nut, Floating		
	248352-0218	Screw, Painted		
	249961	Spacer		
	1-261111-10	Washer, Fiber		
		-- -- -- -- -- * -- -- -- -- --		

(*) See dedicated manual.

ITEM NUMBER	PART NUMBER	DESCRIPTION	SYMBOL NUMBER	USED ON
8	692454	Frame Assembly, Drive Amplifier (see Figure 7-22)		
9	11-2271-2X	Z-Fold Drawer (*)		
9	1-260854	Blank Panel (3.50 inches) (A-P)		
	245244-02	Nut, Floating		
	248352-0218	Screw, Painted		
	249961	Spacer		
	1-261111-10	Washer, Fiber		
		-- -- -- -- -- * -- -- -- -- --		
10	1-449890	Blank Panel (10.50 inches) (used if item 3 is 13-4185-10)		
10	1-449891	Blank Panel (12.25 inches) (used if item 3 is 13-46XX-XX or blank)		
10	1-366717	Blank Panel (15.75 inches) (used if item 3 is 892035) (A-P)		
	245244-02	Nut, Floating		
	248352-0218	Screw, Painted		
	249961	Spacer		
	1-261111-10	Washer, Fiber		
		-- -- -- -- -- * -- -- -- -- --		
11	120903-216	Bumper		
12	1-843901-20	Door Assembly		
13	1-444405	Rear Panel Slotted (1.75 inches) (A-P)		
	31-121534-0220	Screw		
	126138-9	Washer, Nylon		
	12-120650-10	Washer		
14	1-449514	Rear Panel Blank (1.75 inches)		
14	1-443766	Rear Panel Blank (3.50 inches)		
14	1-443768	Rear Panel Blank (5.25 inches)		
14	1-384370	Rear Panel Blank (7.00 inches)		
14	1-466758	Rear Panel Blank (10.50 inches)		
14	1-466930	Rear Panel Blank (12.25 inches)		
14	1-680279	Rear Panel Blank (14.00 inches)		
14	1-464637	Rear Panel Blank (19.25 inches)		
14	1-284450	Panel, Formed, Perforated (21.00 inches) (A-P)		
	31-121534-0220	Screw		
	126138-9	Washer, Nylon		
	12-120650-10	Washer		
		-- -- -- -- -- * -- -- -- -- --		
15	11-1601-11	Main Power Input Panel (see Figure 7-20) (A-P)		
	31-121534-0220	Screw		
	126138-9	Washer, Nylon		
	12-120650-10	Washer		

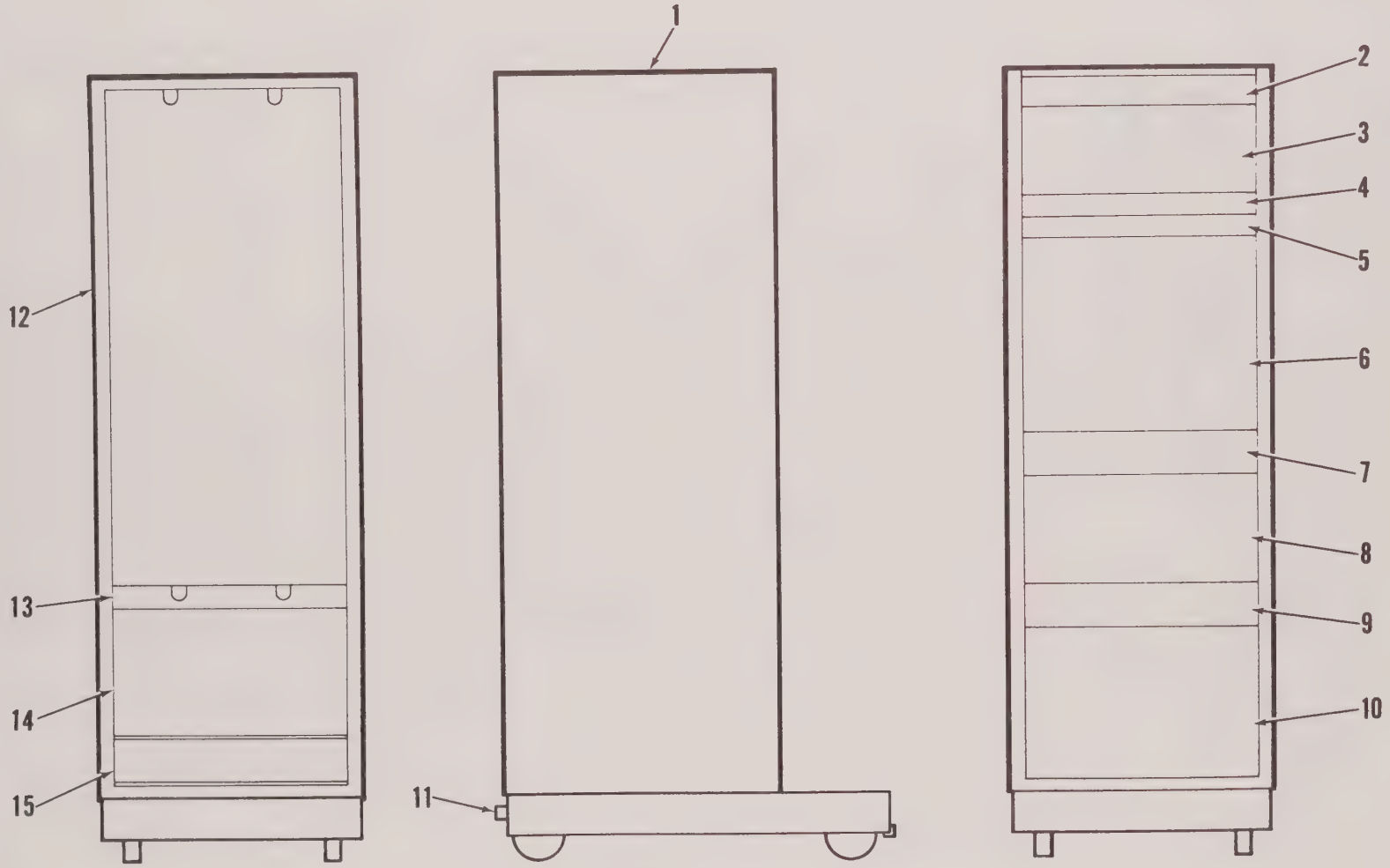

FIGURE 7-1 CABINET ASSEMBLY, VERTICAL SYSTEM - 11-1154-61

VERTICAL SYSTEM
200 RECORDER
MODEL XXXX-1704-1XX
FIGURE 7-1A

ITEM NUMBER	PART NUMBER	DESCRIPTION	SYMBOL NUMBER	USED ON
	11-1170-62	Cabinet, Assembly, Vertical-Oversized Base		
1	488243	Cabinet		
2	885664	Base Assembly, Castered (A-P)		
	31-119998-45	Nut, Hex		
	1-216741-439	Washer, Lock		
	31-119924-4510	Screw, Hex Hd.		
		-- -- -- -- -- * -- -- -- -- --		

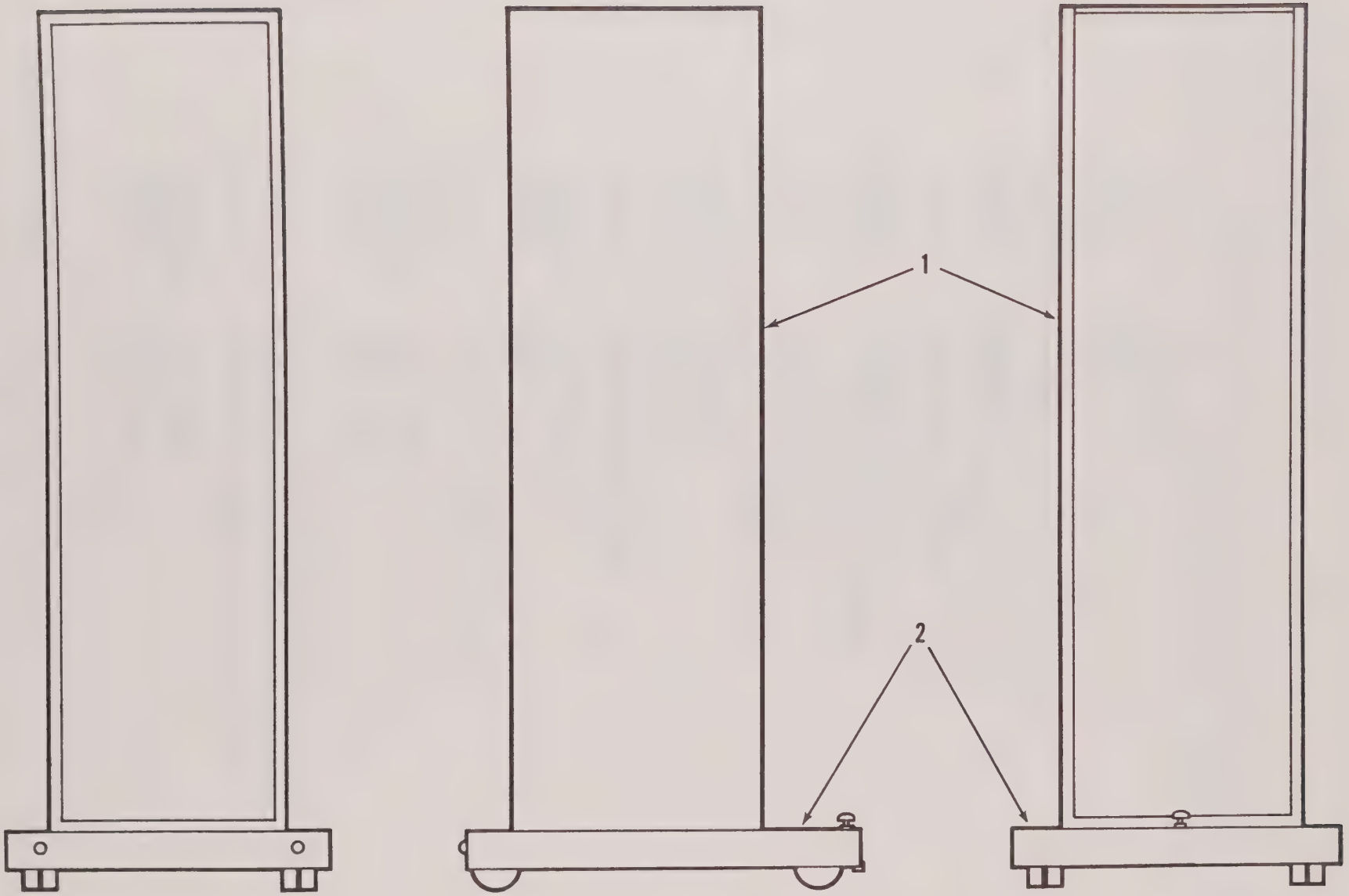

FIGURE 7-1A CABINET ASSEMBLY - VERTICAL - OVERSIZE BASE - 11-1170-62

HORIZONTAL SYSTEM
200 RECORDER, SLOPE FRONT CABINET
MODEL XXXX-1704-2XX
FIGURE 7-2

ITEM NUMBER	PART NUMBER	DESCRIPTION	SYMBOL NUMBER	USED ON
	11-1140-61	Cabinet Assembly		
1	892871	Cabinet		
2	866564-1	Cover		
		(A-P)		
	31-119918-02	Nut, Hex		
	1-216741-430	Lockwasher, Spring		
		-- -- -- -- -- * -- -- -- -- --		
3	13-46XX-XX	Preamplifiers (*)		
3A	11-1202-22	Preamplifier Cage Kit (*)		
		(A-P)		
	892448	Cable Assembly, Extension		
		-- -- -- -- -- * -- -- -- -- --		
3	13-4185-10	Preamplifier Assembly (*)		
3	892035	Preamplifier Assembly (*)		
3B	11-1202-27	Kit Assembly, Rack Mount (892035)		
		(A-P)		
	892448	Cable Assembly, Extension		
		-- -- -- -- -- * -- -- -- -- --		
3	1-461008	Blank Panel (7.00 inches)		
		(A-P)		
	245244-02	Nut, Floating		
	248352-0218	Screw, Painted		
	249961	Spacer		
	1-261111-10	Washer, Fiber		
		-- -- -- -- -- * -- -- -- -- --		
4	892693-X	Pen Position Panel (see Figure 7-21)		
		(A-P)		
	245244-02	Nut, Floating		
	248352-0218	Screw, Painted		
	249961	Spacer		
	1-261111-10	Washer, Fiber		
		-- -- -- -- -- * -- -- -- -- --		
5	11-1603-12	System Power Panel (see Figure 7-19)		
		(A-P)		
	245244-02	Nut, Floating		
	248352-0218	Screw, Painted		
	249961	Spacer		
	1-261111-10	Washer, Fiber		
		-- -- -- -- -- * -- -- -- -- --		
6	1-461006	Blank Panel (1.75 inches) (used if item 3 is 13-4185-10)		
6	1-260854	Blank Panel (3.50 inches) (used if item 3 is 13-46XX-XX or blank)		
6	1-461008	Blank Panel (7.00 inches) (used if item 3 is 892035)		
		(A-P)		
	245244-02	Nut, Floating		
	248352-0218	Screw, Painted		
	249961	Spacer		
	1-261111-10	Washer, Fiber		
		-- -- -- -- -- * -- -- -- -- --		

(*) See dedicated manual.

HORIZONTAL SYSTEM
200 RECORDER, SLOPE FRONT CABINET
MODEL XXXX-1704-2XX
FIGURE 7-2 (continued)

ITEM NUMBER	PART NUMBER	DESCRIPTION	SYMBOL NUMBER	USED ON
7	766562-1	Cover Assembly		
		(A-P)		
	1-216741-430	Lockwasher, Spring		
	31-119918-02	Nut, Hex		
		-- -- -- -- -- * -- -- -- -- --		
8	XXXX-2607-61	Oscillograph, Horizontal (see Figure 7-13)		
9	692454-X	Frame Assembly, Drive Amp (see Figure 7-22)		
10	1-461008	Blank Panel (7.00 inches)		
		(A-P)		
	245244-02	Nut, Floating		
	248352-0218	Screw, Painted		
	249961	Spacer		
	1-261111-10	Washer, Fiber		
		-- -- -- -- -- * -- -- -- -- --		
11	1-843901-20	Door Assembly, Rear		
12	1-444405	Panel Blank, Slotted		
		(A-P)		
	31-121534-0220	Screw		
	126138-9	Washer, Nylon		
	12-120650-10	Washer		
		-- -- -- -- -- * -- -- -- -- --		
13	11-1601-11	Main Power Input Panel (see Figure 7-20)		
		(A-P)		
	245244-02	Nut, Floating		
	248352-0218	Screw, Painted		
	249961	Spacer		
	1-261111-10	Washer, Fiber		
		-- -- -- -- -- * -- -- -- -- --		
14	120903-216	Bumper		

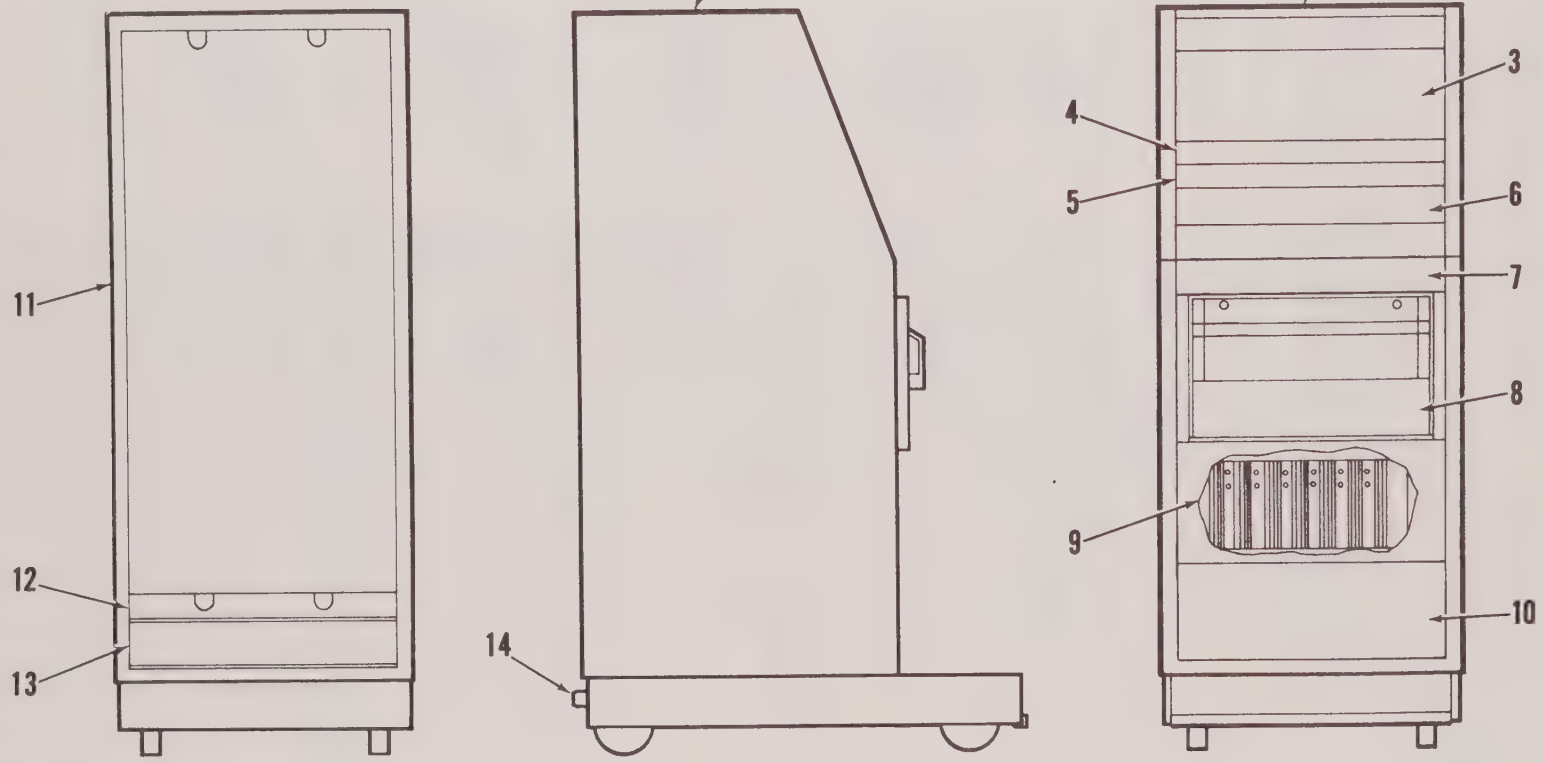

FIGURE 7-3 CABINET ASSEMBLY, SLOPE FRONT SYSTEM - 11-1140-61

HORIZONTAL SYSTEM
200 RECORDER, LOW-BOY CABINET
MODEL XXXX-1704-2XX
FIGURE 7-3

ITEM NUMBER	PART NUMBER	DESCRIPTION	SYMBOL NUMBER	USED ON
1	11-1112-71	Cabinet Assembly, Low-Boy		
2	13-46XX-XX	Preamplifiers (*)		
2A	11-1202-19	Preamplifier Cage Kit Assembly (*)		
		(A-P)		
	892448	Cable Assembly, Extension		
		-- -- -- -- -- * -- -- -- -- --		
2	13-4185-10	Preamplifier Assembly (*)		
2	892035	Preamplifier Assembly (*)		
		(A-P)		
	892448	Cable Assembly, Extension		
		-- -- -- -- -- * -- -- -- -- --		
2B	11-1202-27	Kit Assembly, Rack Mount (892035)		
2	1-461008	Blank Panel		
		(A-P)		
	248352-0128	Screw, Painted		
	245244-02	Nut, Floating		
	249961	Spacer		
	1-261111-10	Washer, Fiber		
		-- -- -- -- -- * -- -- -- -- --		
3	11-1603-12	Panel Assembly, Power Switch (see Figure 7-19)		
		(A-P)		
	248352-0128	Screw, Painted		
	245244-02	Nut, Floating		
	249961	Spacer		
	1-261111-10	Washer, Fiber		
		-- -- -- -- -- * -- -- -- -- --		
4	892693-X	Panel Assembly, Pen Position (see Figure 7-21)		
		(A-P)		
	248352-0128	Screw, Painted		
	245244-02	Nut, Floating		
	249961	Spacer		
	1-261111-10	Washer, Fiber		
		-- -- -- -- -- * -- -- -- -- --		
5	1-461006	Blank Panel (1.75 inches) (used if item 2 is 13-46XX-XX)		
5	1-461007	Blank Panel (5.25 inches) (used if item 2 is 892035)		
		(A-P)		
	248352-0128	Screw, Painted		
	245244-02	Nut, Floating		
	249961	Spacer		
	1-261111-10	Washer, Fiber		
		-- -- -- -- -- * -- -- -- -- --		

(*) See dedicated manual.

HORIZONTAL SYSTEM
200 RECORDER, LOW-BOY CABINET
MODEL XXXX-1704-2XX
FIGURE 7-3 (continued)

ITEM NUMBER	PART NUMBER	DESCRIPTION	SYMBOL NUMBER	USED ON
6	864181-1	Panel Assembly		
7	XXXX-2607-61	Oscillograph Assembly (see Figure 7-13)		
8	347430-1	Panel, Trim		
9	692454-X	Driver Amplifier Frame (see Figure 7-22)		
10	864184-1	Panel, Top		
11	282839	Panel, Perforated		
12	1-444405	Panel, Blank, Perforated (A-P)		
	12-120650-10	Washer		
	126138-9	Washer, Nylon		
	31-121534-0220	Screw		
		-- -- -- -- -- * -- -- -- -- --		
13	693403-1	Panel, Blank, Perforated (12.25 inches) (A-P)		
	12-120650-10	Washer		
	126138-9	Washer, Nylon		
	31-121534-0220	Screw		
		-- -- -- -- -- * -- -- -- -- --		
14	1443769	Panel, Blank (5.25 inches) (A-P)		
	12-120650-10	Washer		
	126138-9	Washer, Nylon		
	31-121534-0220	Screw		
15	11-1601-11	Main Power Input Panel (see Figure 7-20)		
16	120903-216	Bumper		

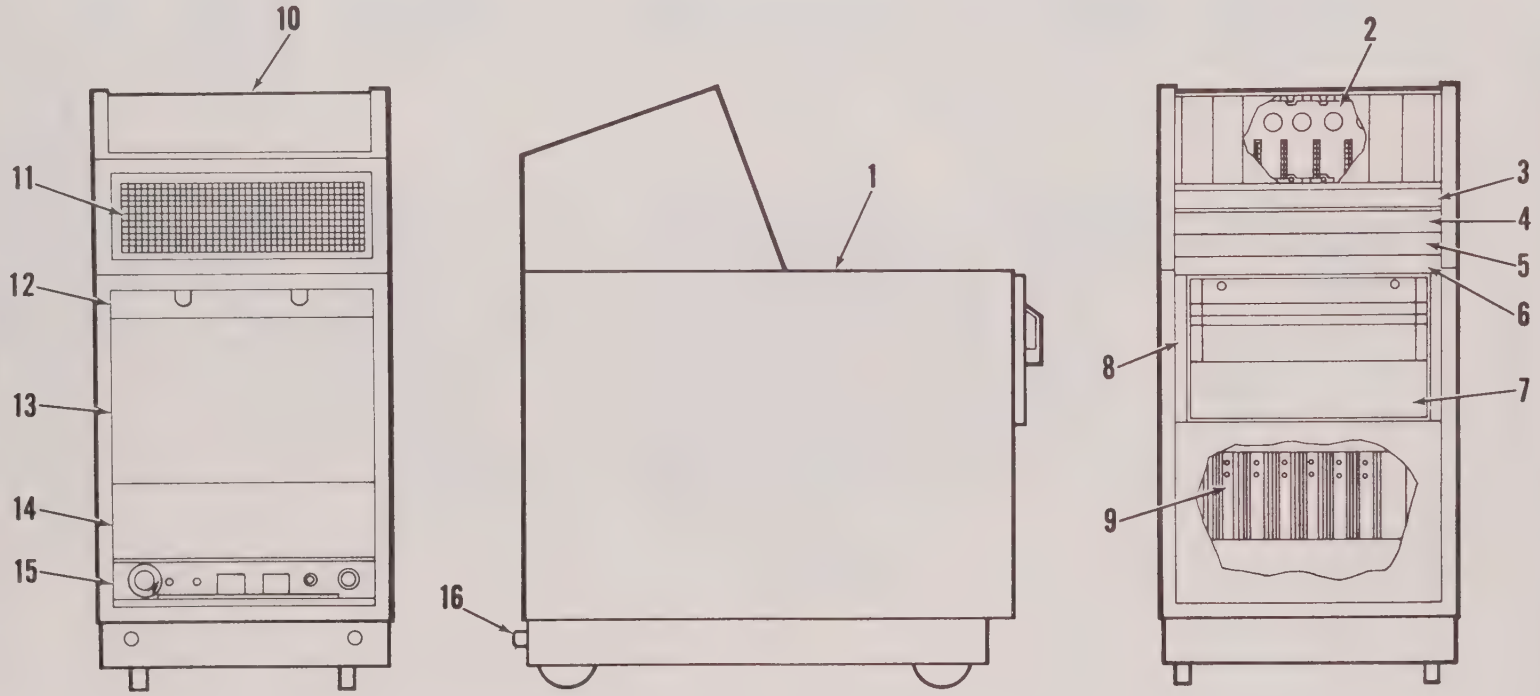

FIGURE 7-4 CABINET ASSEMBLY, LOW BOY SYSTEM - 11-1112-71

EXPLODED VIEW PARTS LIST
OSCILLOGRAPH ASSEMBLY - VERTICAL, INK, - MODULAR
MODEL XXXX-2607-71
FIGURE 7-4

ITEM NUMBER	PART NUMBER	DESCRIPTION	SYMBOL NUMBER	USED ON
	XXXX-2607-71	Oscillograph Assembly - Vertical, Ink - Modular		
	792642	Kit Assembly, Penmotor 40mm		
	792643	Kit Assembly, Penmotor 80mm		
1	789763	Pen Assembly, Ink		
2	667630-1	Tube		
3	891967	Penmotor Assembly 40 mm		
4	892313	Penmotor Assembly 80 mm		
5	686536	Saddle		
6	684853	Saddle		
7	292444	Spacer		
8	1-216741-430	Lockwasher, Spring		
9	31-119922-0212	Screw, Cap-Hex Soc. Hd.		
10	1-216741-425	Lockwasher, Spring		
11	31-119922-8214	Screw, Cap Hex Soc. Hd.		
12	288755-104	Capacitor (used on 886220)		
	792651-1	Bar Assembly, Event Marker - 1111*		
	792651-2	Bar Assembly, Event Marker - 1122*		
	792651-3	Bar Assembly, Event Marker - 1222*		
	792651-4	Bar Assembly, Event Marker - 2222*		
13	892467	Bar, Mtg. (part of 792651-1)		
	892466	Bar, Mtg. (part of 792651-2)		
	892460	Bar, Mtg. (part of 792651-3)		
	892894	Bar, Mtg. (part of 792651-4)		
14	792567	Event Marker Assembly (A-P)		
	31-119914-2608	Screw, Pan Hd.		
		-- -- -- -- -- * -- -- -- -- --		
15	644728	Tube Assy., Ink		
16	891971	Bracket Assy, Shield - 2222*		
	892464	Bracket Assy, Shield - 1222*		
	892463	Bracket Assy, Shield - 1122*		
	892465	Bracket Assy, Shield - 1111*		
17	694437	Cable Clamp Assy. (A-P)		
	31-119918-6212	Screw, Mach. Pan Hd.		
	1-118195-305	Washer, Plain		
	1-216741-420	Lockwasher, Spg.		
	31-119998-62	Nut, Hex		
		-- -- -- -- -- * -- -- -- -- --		
18	892633	Chassis Assy., Mod. Osc (see Figure 7-5)		
19	286770	Cover, Panel		

*1111 - Four 80 mm penmotors & drive amplifiers.
1122 - Two 80 mm & four 40 mm penmotors & drive amplifiers.
1222 - One 80 mm & six 40 mm penmotors & drive amplifiers.
2222 - Eight 40 mm penmotors & drive amplifiers.

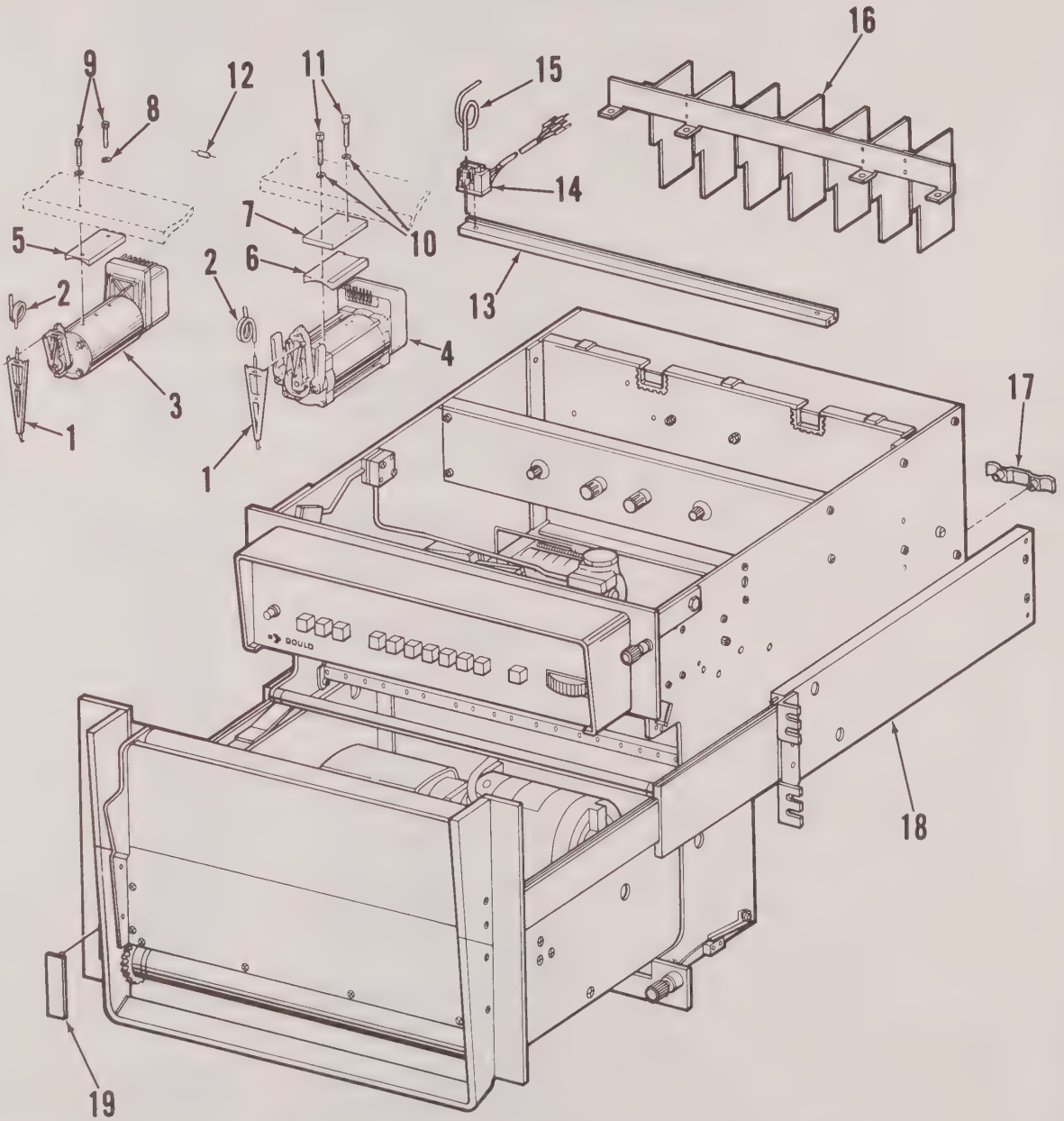

FIGURE 7-4 OSCILLOGRAPH ASSEMBLY MODEL XXXX-2607-71

EXPLODED VIEW PARTS LIST
CHASSIS ASSEMBLY, MODULAR OSCILLOGRAPH, VERTICAL - 892633
FIGURE 7-5

ITEM NUMBER	PART NUMBER	DESCRIPTION	SYMBOL NUMBER	USED ON
	892633	Chassis Assembly, Modular Oscillograph		
1	343214-910	Bracket Assy., Paper Drag (see Figure)		
2	232136	Lamp, Fluorescent		
3	892574	Harness Assy., Complete (see Figure)		
		(A-P)		
	31-119918-6206	Screw, Mach. Pan Hd.		
	31-119918-0210	Screw, Mach. Pan Hd.		
	1-216741-430	Lockwasher, Spring		
	1-118195-309	Washer, Plain		
	1-216741-411	Lockwasher, Spg.		
	31-119918-40	Nut, Hex		
	31-119918-4006	Screw, Mach. Pan Hd.		
		-- -- -- -- -- * -- -- -- -- --		
4	848068-1	Hood Assy.		
		(A-P)		
	31-119920-8206	Screw, Mach. Fl. Hd.		
	245208-6206	Screw, Set		
		-- -- -- -- -- * -- -- -- -- --		
5	748016-1	Panel Assy., Front-Top		
		(A-P)		
	1-118195-309	Washer, Plain		
	1-216741-430	Lockwasher, Spg.		
	31-119918-0212	Screw, Mach. Fl. Hd.		
6	447978	Support, Hinge		
7	241367	Bolt, Shouldered		
8	241368	Spacer, Bearing		
9	648308	Knob Assy.		
		(A-P)		
	128017-6203	Screw, Set		
		-- -- -- -- -- * -- -- -- -- --		
10	102625-9	Fuse		
11	116198-8	Fuse, Slo-Blo		
12	124804-3	Clamp, Cable		
13	124804-4	Clamp, Cable		
14	243894-2	Screw, Captive		
15	648026	Bracket Assy., Angle		
		(A-P)		
	31-119918-6206	Screw, Mach. Pan Hd.		
		-- -- -- -- -- * -- -- -- -- --		
16	231964	Starter, Fluor., Lamp		
17	666190	Cover Assy., Silkscreen		
		(A-P)		
	1-216741-425	Lockwasher, Spg.		
	31-119918-8204	Screw, Mach. Pan Hd.		
		-- -- -- -- -- * -- -- -- -- --		

EXPLODED VIEW PARTS LIST
CHASSIS ASSEMBLY, MODULAR OSCILLOGRAPH, VERTICAL - 892633
FIGURE 7-5 (continued)

ITEM NUMBER	PART NUMBER	DESCRIPTION	SYMBOL NUMBER	USED ON
18	848157	Manifold Assy., Complete (see Figure 7-8) (A-P)		
	31-119914-6208	Screw, Mach. Pan Hd.		
	1-118195-303	Washer, Plain		
	1-216741-402	Lockwasher, Spg.		
		-- -- -- -- -- * -- -- -- -- --		
19	232140	Bracket, Angle (A-P)		
	31-119918-8208	Screw, Mach. Pan Hd.		
	1-216741-425	Lockwasher, Spg.		
		-- -- -- -- -- * -- -- -- -- --		
20	848862	Timer Assy., Interval (see Figure 7-25) (A-P)		
	31-119918-8206	Screw, Mach. Pan Hd.		
	1-216741-425	Lockwasher,Spg.		
		-- -- -- -- -- * -- -- -- -- --		
21	848137	Ink Supply Assy. (see Figure 7-24) (A-P)		
		-- -- -- -- -- * -- -- -- -- --		
22	444724	Bracket, Mtg. (A-P)		
		-- -- -- -- -- * -- -- -- -- --		
23	231962	Ballast, Lamp (A-P)		
	31-119918-0208	Screw, Mach. Pan Hd.		
	1-216741-430	Lockwasher, Spg.		
	31-119998-02	Nut, Hex		
		-- -- -- -- -- * -- -- -- -- --		
24	129066	Rectifier, Silicon		
25	123108-22	Grommet		
26	341987	Bracket, Mtg., Diodes		
27	330112	Transformer, Power (A-P)		
	1-216741-420	Lockwasher, Spg.		
	31-119918-62	Nut, Hex		
	31-119918-6206	Screw, Mach. Pan Hd.		
		-- -- -- -- -- * -- -- -- -- --		
28	105960	Strip, Terminal		
29	104099-3	Terminal Strip		
30	242177	Guide, Harness (A-P)		
		-- -- -- -- -- * -- -- -- -- --		

EXPLODED VIEW PARTS LIST
CHASSIS ASSEMBLY, MODULAR OSCILLOGRAPH, VERTICAL - 892633
FIGURE 7-5 (continued)

ITEM NUMBER	PART NUMBER	DESCRIPTION	SYMBOL NUMBER	USED ON
31	124804-2	Clamp, Cable		
32	247959	Spacer		
33	128020-507	Capacitor, Fixed		
34	129451	Relay, 28 VDC		
		(A-P)		
	1-216741-420	Lockwasher, Spg.		
	31-119918-62	Nut, Hex		
		-- -- -- -- -- * -- -- -- -- --		
35	442454-910	Drive Assy. (see Figure 7-9)		
		(A-P)		
	31-119918-0214	Screw, Mach. Pan Hd.		
	31-119998-02	Nut, Hex		
	1-216741-430	Lockwasher, Spg.		
	3-109142-9	Washer, Plain		
	31-119918-8214	Screw, Mach. Pan Hd.		
	1-118195-307	Washer, Plain		
	1-216741-425	Lockwasher, Spg.		
36	31-119923-8206	Screw, Set		
37	127933	Spring, Tension Roller		
38	246841	Guide, Spring		
		(A-P)		
	31-119918-0208	Screw, Mach. Pan Hd.		
	31-119998-02	Nut, Hex		
	1-118195-309	Washer, Plain		
		-- -- -- -- -- * -- -- -- -- --		
39	243893	Shape, Extruded		
40	241690-910	Bracket Assy.		
		(A-P)		
	31-119918-6206	Screw, Mach. Pan Hd.		
		-- -- -- -- -- * -- -- -- -- --		
41	241842	Actuating Arm		
42	241839	Spring, Actuating Arm		
43	241840	Support, Spring		
44	292443	Guide, Actuating Arm		
		(A-P)		
		-- -- -- -- -- * -- -- -- -- --		
45	241838	Bolt, Shouldered		
46	127852	Capacitor, Fixed		
47	128541	Bracket, Footed		
48	346091	Bar Mtg., Event Mark Conn.		
		(A-P)		
	31-119920-2606	Screw, Mach. Fl. Hd.		
		-- -- -- -- -- * -- -- -- -- --		

EXPLODED VIEW PARTS LIST
CHASSIS ASSEMBLY, MODULAR OSCILLOGRAPH, VERTICAL - 892633
FIGURE 7-5 (continued)

ITEM NUMBER	PART NUMBER	DESCRIPTION	SYMBOL NUMBER	USED ON
49	243043-910	Guide Assy., Paper		
50	332080	Chute, Paper		
		(A-P)		
	1-216741-420	Lockwasher, Spg.		
	31-119918-62	Nut, Hex		
	31-119920-6210	Screw, Mach. Fl. Hd.		
	1-118195-305	Washer, Plain		
		-- -- -- -- -- * -- -- -- -- --		
51	744801-1	Bezel Assy., Silkscreen		
		(A-P)		
	13-249640-8206	Screw, Fl. Hd.		
		-- -- -- -- -- * -- -- -- -- --		
52	242722	Support, Spanner Tool		
		(A-P)		
	1-216741-420	Lockwasher, Spg.		
	31-119918-6204	Screw, Mach. Pan Hd.		
		-- -- -- -- -- * -- -- -- -- --		
53	242723-910	Tool Assy., Spanner		
54	241769	Spring		
55	242186-910	Arm Assy., Sensing		
		(A-P)		
	31-119923-6203	Screw, Set		
		-- -- -- -- -- * -- -- -- -- --		
	342627-910	Switch Assy., Sensing		
		(A-P)		
	31-119920-6204	Screw, Mach. Fl. Hd.		
		-- -- -- -- -- * -- -- -- -- --		
56	242625-910	Bracket Assy.		
57	242626-910	Actuator Assy.		
58	127666	Switch		
		(A-P)		
	1-118195-304	Washer		
	31-119918-4010	Screw		
	31-119998-40	Nut		
	1-216741-411	Lockwasher		
	665385	Insulator		
		-- -- -- -- -- * -- -- -- -- --		
59	131829	Plate, Support - Supply Roll		
		(A-P)		
	31-119920-8204	Screw, Mach. Fl. Hd.		
		-- -- -- -- -- * -- -- -- -- --		
60	247944	Screw, Adjusting		
		(A-P)		
	31-119998-47	Nut, Hex		
		-- -- -- -- -- * -- -- -- -- --		

EXPLODED VIEW PARTS LIST
CHASSIS ASSEMBLY, MODULAR OSCILLOGRAPH, VERTICAL - 892633
FIGURE 7-5 (continued)

ITEM NUMBER	PART NUMBER	DESCRIPTION	SYMBOL NUMBER	USED ON
61	247943	Nut, Plate		
		(A-P)		
	31-119920-8207	Screw, Mach. Fl. Hd.		
		-- -- -- -- -- * -- -- -- -- --		
62	242051-2	Belt, Timing - Drive		
63	241493	Bolt, Shouldered		
64	241506	Spring, Pawl		
65	241507	Pawl, Bezel-Locking		
66	242061-910	Pulley Assy., Trans.		
		(A-P)		
	31-119923-6204	Screw, Set		
67	242044	Collar, Locking		
68	649834	Stop Assy.		
		(A-P)		
	31-119918-6203	Screw, Mach.-Pan Hd.		
	1-216741-420	Lockwasher, Spg.		
		-- -- -- -- -- * -- -- -- -- --		
69	342167-910	Shaft Assy., Supply Roll (see Figure 7-10)		
70	246343-6	Clip, Tension Spring		
		(A-P)		
	1-216741-402	Lockwasher, Spg.		
	31-119998-26	Nut, Hex		
		-- -- -- -- -- * -- -- -- -- --		
71	265814-10	Terminal Board		
		(A-P)		
	1-216741-420	Lockwasher, Spg.		
	31-119918-62	Nut, Hex		
	31-119918-6210	Screw, Mach. Pan Hd.		
	1-216741-425	Lockwasher, Spg.		
		-- -- -- -- -- * -- -- -- -- --		
72	892628	Paper Magazine Assy. (see Figure 7-11)		
73	1-128693-3	Grommet, Cat. Nylon		
74	248607	Screw, Shoulder		
		(A-P)		
	1-216741-430	Lockwasher, Spg.		
	31-119998-02	Nut, Hex		
		-- -- -- -- -- * -- -- -- -- --		
75	20-119922-8204	Screw, Cap Soc. Hd.		
76	20-119922-8208	Screw, Cap Soc. Hd.		
77	749346	Cable Assy., Spec. Purpose		
78		"O" Ring		

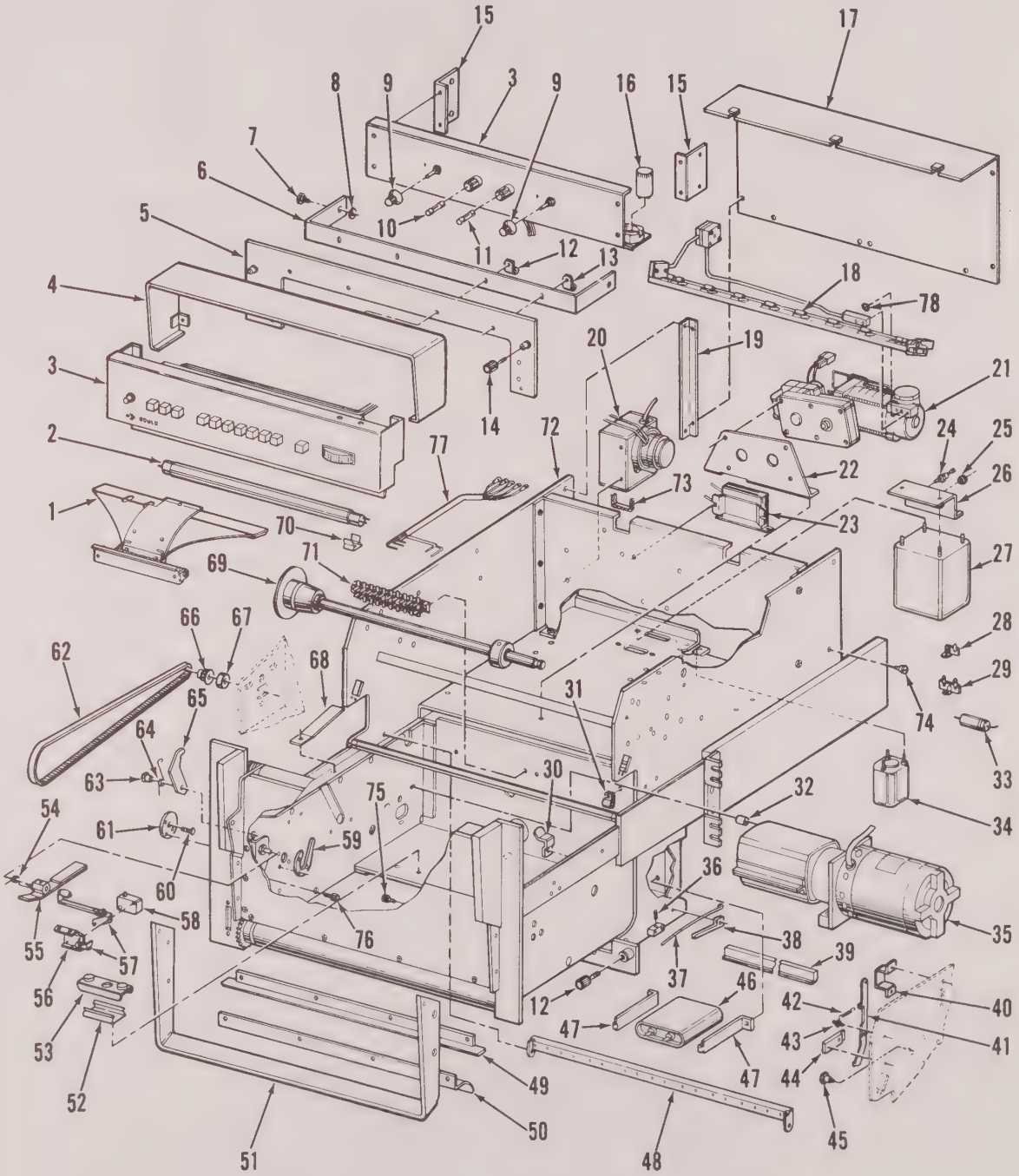

FIGURE 7-5 CHASSIS ASSEMBLY, MODULAR OSCILLOGRAPH, VERTICAL - 892633

EXPLODED VIEW PARTS LIST
BRACKET ASSEMBLY, PAPER DRAG - 343214 (VERTICAL OSCILLOGRAPH)
FIGURE 7-6

ITEM NUMBER	PART NUMBER	DESCRIPTION	SYMBOL NUMBER	USED ON
	343214	Bracket Assy., Paper Drag		
1	242646-910	Bracket, Subassembly		
2	242648	Spring		
3	1-123349-31	Ring, Retaining Ext.		
4	242309-910	Arm Assembly, Paper Drag		
5	242647	Shaft		
		(A-P)		
	31-119918-0206	Screw, Mach. Pan Hd.		
		-- -- -- -- -- * -- -- -- -- --		
6	31-119918-6204	Screw, Mach. Pan Hd.		

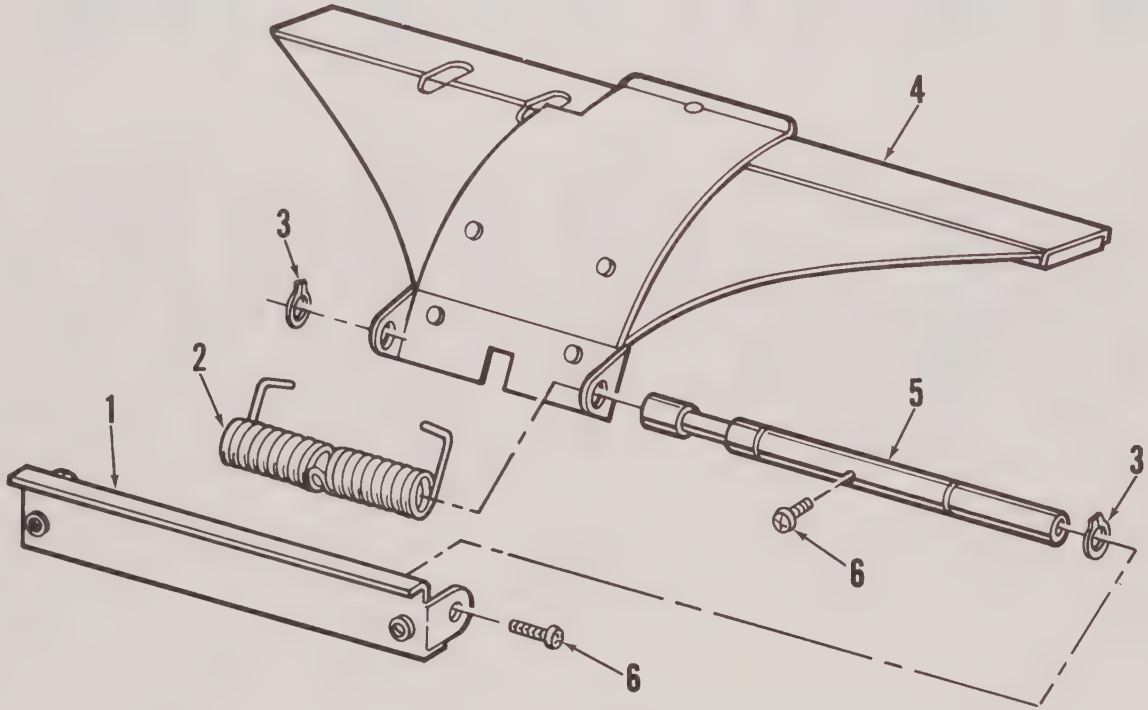

FIGURE 7-6 BRACKET ASSEMBLY, PAPER DRAG - 343214 (VERTICAL OSCILLOGRAPH)

EXPLODED VIEW PARTS LIST
HARNESS ASSEMBLY COMPLETE - 892574 (VERTICAL OSCILLOGRAPH)
FIGURE 7-7

ITEM NUMBER	PART NUMBER	DESCRIPTION	SYMBOL NUMBER	USED ON
	892574	Harness Assy., Complete		
1	719365	Holder, Fuse		
2	748153	Panel Assy.		
3	447940	Switch, Rotary		
4	121047	Conn., Recep., Male		
5	266626-2	Lug, Soldering		
6	128041	Socket, Relay - 14 Conn.		
7	265814-12	Terminal Board		
8	341681-910	Component Assy.		
9	130168	Conn., Recep., Female		
10	231887	Semi-Conductor Device		
11	231965	Socket, Lamp Starter (A-P)		
	31-119918-4006	Screw, Mach. Pan Hd.		
		-- -- -- -- -- * -- -- -- -- --		
12	684024	Bracket Assy., Socket Mtg. (A-P)		
	31-119918-4006	Screw, Mach. Pan Hd.		
		-- -- -- -- -- * -- -- -- -- --		
13	19-211473-102	Resistor, Variable		
14	247917	Conn. Elect. 2 Cond. Fem.		
15	347834	Switch, P.B. - 11 Pos.		
16	248361	Ammeter, D.C.		
17	248350	Bracket, Angle (A-P)		
	31-119920-4004	Screw, Mach. Fl. Hd.		
	1-216741-411	Lockwasher		
	31-119998-40	Nut, Hex		
		-- -- -- -- -- * -- -- -- -- --		
18	892621	Panel, Subassy.		
19	1-241774-8	Lamp		
20	248808	Clip, Speed		
21	248809	Socket, Molded		
22	246552-1	Button		
	892573	Harness Assy.		
23	265840-1	Lug		
24	265840-2	Lug		

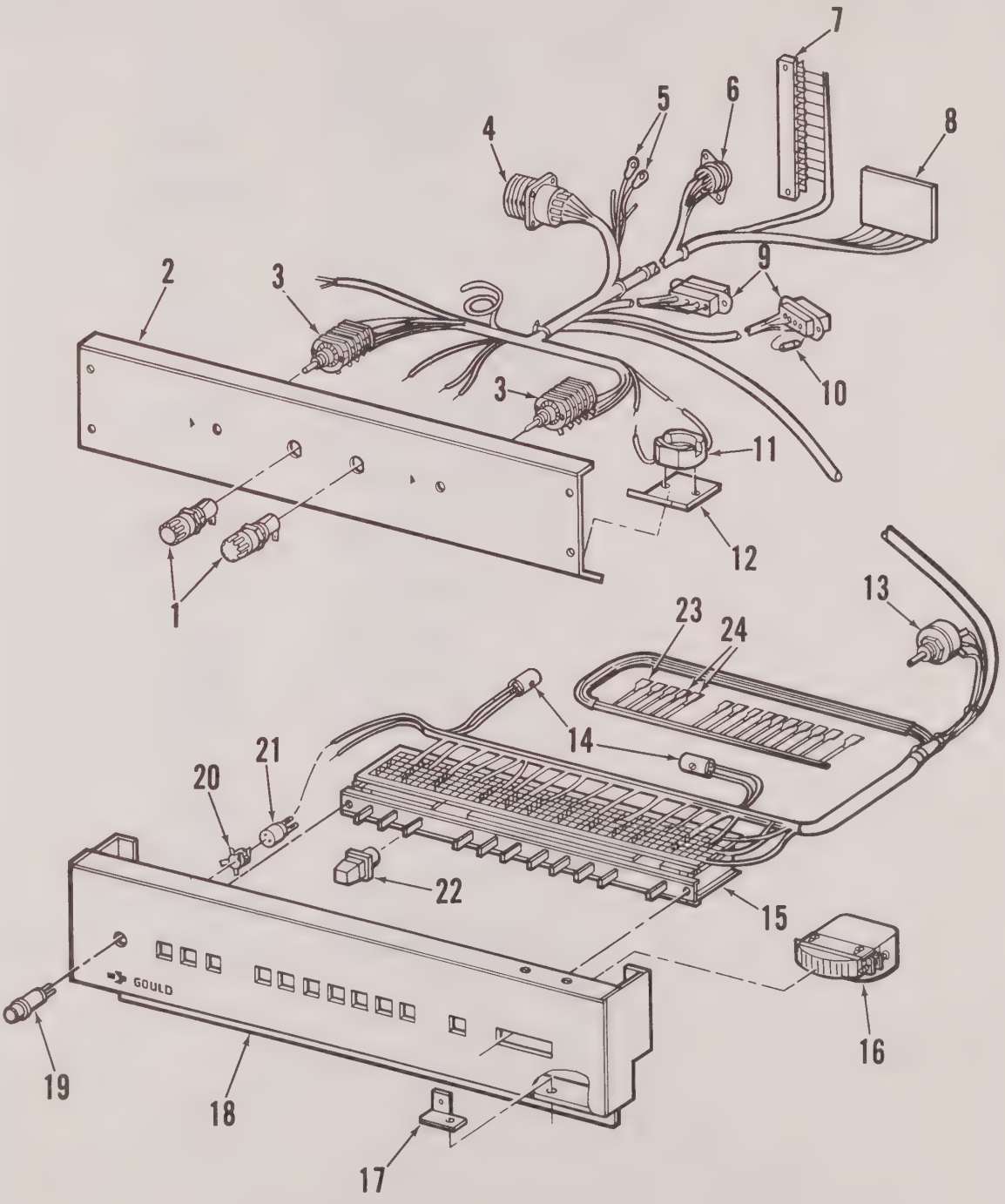

FIGURE 7-7 HARNESS ASSEMBLY COMPLETE - 892574 (VERTICAL OSCILLOGRAPH)

EXPLODED VIEW PARTS LIST
MANIFOLD ASSEMBLY COMPLETE - 848157 (VERTICAL OSCILLOGRAPH)
FIGURE 7-8

ITEM NUMBER	PART NUMBER	DESCRIPTION	SYMBOL NUMBER	USED ON
	848157	Manifold Assembly, Complete		
1	241837	Cap, End-Manifold		
2	232780-4	Packing, Preformed		
3	242421	Support, Manifold		
4	241836	Arm, Manifold		
		(A-P)		
	20-119922-6205	Screw, Cap		
	1-216741-420	Lockwasher, Spring		
		-- -- -- -- -- * -- -- -- -- --		
5	341847	Manifold, I/O Valve		
6	241844	Valve, Manifold Shut-Off		
7	342156-910	Bar Assy., I/O Valve		
8	241845	Retainer, Seal Manifold		
		(A-P)		
	31-119918-4005	Screw, Mach. Pan Hd.		
	1-216741-411	Lockwasher, Spring		
		-- -- -- -- -- * -- -- -- -- --		
9	845706	Tube Assy. Manifold		
		(A-P)		
	1-216741-411	Lockwasher, Spring		
	31-119918-4006	Screw, Mach.		
		-- -- -- -- -- * -- -- -- -- --		
10	232780-2	Packing, Preformed		
11	344660	Body, Valve		
12	244655	Valve, Check		
13	244657	Spring		
14	232780-7	Packing, Preformed		
15	744679	Bellows Assy.		
16	244688	Spring, Helical		
17	244673	Cover		
		(A-P)		
	31-119914-2614	Screw, Pan Hd.		
	1-216741-402	Lockwasher, Spring		
	31-119914-2610	Screw		
18	241843	Nipple, Valve		
19	240707-4004	Screw, Assembled		

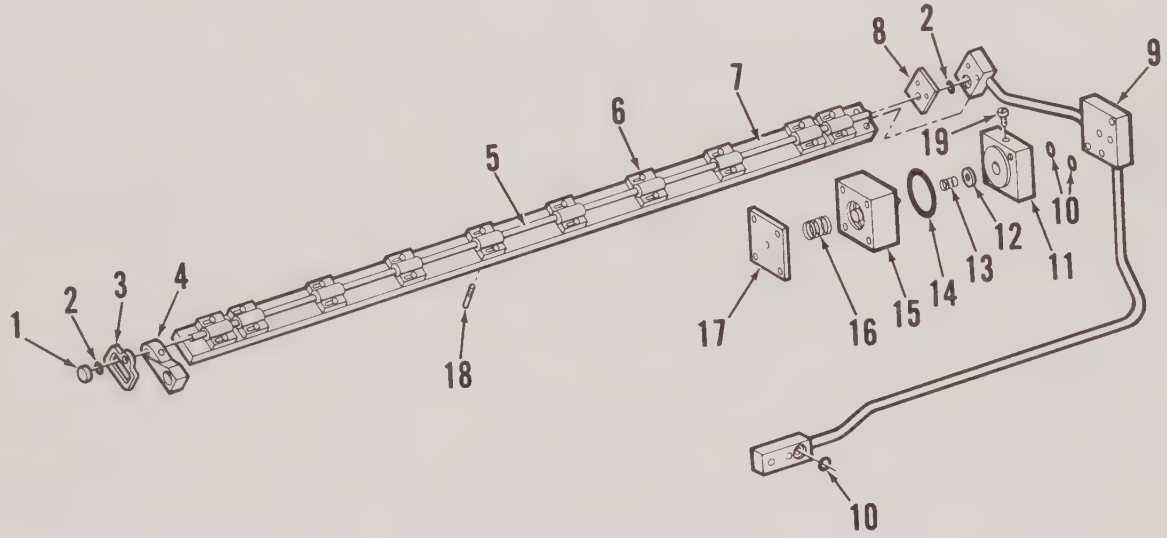

FIGURE 7-8 MANIFOLD ASSEMBLY COMPLETE - 848157 (VERTICAL OSCILLOGRAPH)

EXPLODED VIEW PARTS LIST
DRIVE ASSEMBLY -442454-910 (VERTICAL OSCILLOGRAPH)
FIGURE 7-9

ITEM NUMBER	PART NUMBER	DESCRIPTION	SYMBOL NUMBER	USED ON
	442454-910	Drive Assembly		
1	432322-915	Transmission Assy., 16SP		
2	242164	Guard, Splash		
3	127913	Coupling, Universal		
4	123695	Core, Coupling		
5	127912	Coupling, Universal		
		(A-P) for items 5 and 3		
	14-119923-6203	Screw, Set-Headless		
		-- -- -- -- -- * -- -- -- -- --		
6	127091	Block, Motor Mount Conn.		
		(A-P)		
	20-119922-0208	Screw, Cap		
	1-216741-430	Lockwasher, Spring		
		-- -- -- -- -- * -- -- -- -- --		
7	341867	Plate, Motor Mtg.		
8	265840-1	Terminal Lug, Recep.		
9	317713-2	Motor, Hysteresis, Sync.		
		(A-P)		
	31-119924-0406	Screw, Cap Hex Soc. Dr.		
		-- -- -- -- -- * -- -- -- -- --		
10	127911	Post, Mtg.		
		(A-P)		
	31-119920-0206	Screw, Mach.		
		-- -- -- -- -- * -- -- -- -- --		
11	265840-1	Terminal Lug, Rec.		

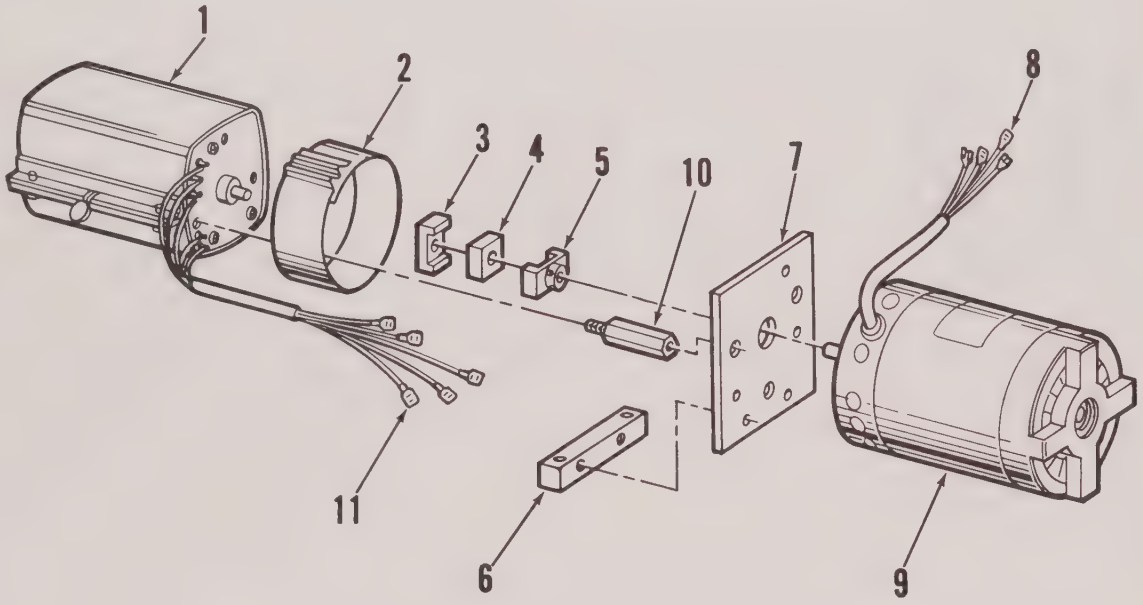

FIGURE 7-9 DRIVE ASSEMBLY 442454-910 (VERTICAL OSCILLOGRAPH)

EXPLODED VIEW PARTS LIST
SHAFT ASSEMBLY, SUPPLY ROLL - 342167 (VERTICAL OSCILLOGRAPH)
FIGURE 7-10

ITEM NUMBER	PART NUMBER	DESCRIPTION	SYMBOL NUMBER	USED ON
	342167	Shaft Assembly, Supply Roll		
1	117695	Plunger		
2	7-104636-6	Ball		
3	242102-910	Hub Assembly, Supply Shaft (A-P)		
	31-119923-6204	Screw, Set		
		-- -- -- -- -- * -- -- -- -- --		
4	232982	Shaft, Roll Supply		
5	227940-7	Ring		
6	127971-910	Hub Assembly, Roller		
7	127903	Spring, Compression		
8	127965	Slug, Bearing		
9	2-217274-305	Pin		

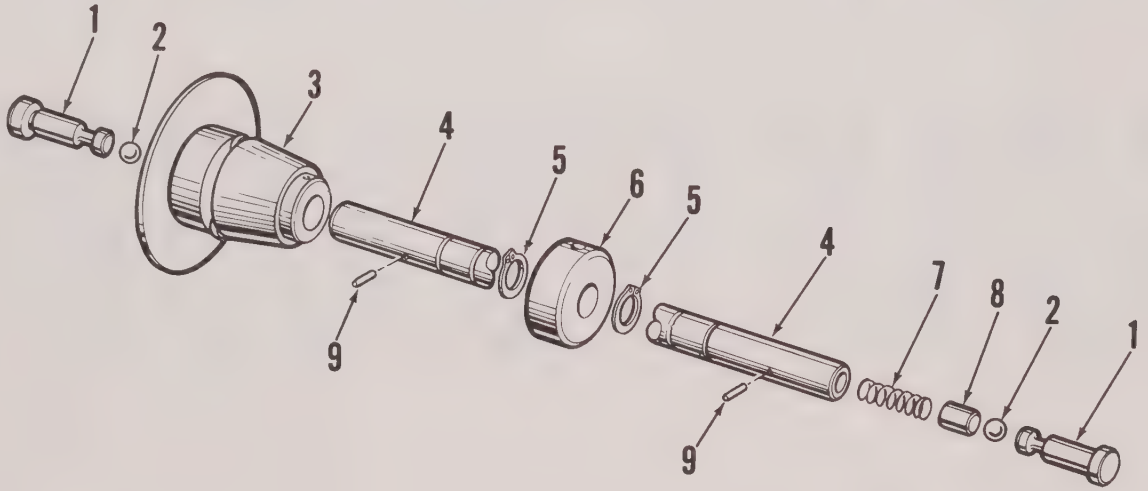

FIGURE 7-10 SHAFT ASSEMBLY, SUPPLY ROLL - 342167 (VERTICAL OSCILLOGRAPH)

EXPLODED VIEW PARTS LIST
PAPER MAGAZINE ASSEMBLY - 892628 (VERTICAL OSCILLOGRAPH)
FIGURE 7-11

ITEM NUMBER	PART NUMBER	DESCRIPTION	SYMBOL NUMBER	USED ON
	892628	Paper Magazine Assembly		
1	342385-910	Bar Assy., Writing (see Figure 7-12)		
2	247955	Spacer, Side Plate		
		(A-P)		
	31-119920-0208	Screw, Mach. Fl. Hd.		
	31-119918-0210	Screw, Mach., Pan Hd.		
	1-216741-430	Lockwasher, Spring		
		-- -- -- -- -- * -- -- -- -- --		
3	4-112468-16	Pin, Spring		
4	242342	Bushing, Paper Guide		
5	241538	Shaft, Paper Guide		
		(A-P)		
	31-119920-8206	Screw, Mach. Fl. Hd.		
		-- -- -- -- -- * -- -- -- -- --		
6	492462	Bar, Mounting		
		(A-P)		
	20-119922-4510	Screw, Cap		
	1-216741-440	Lockwasher, Spring		
		-- -- -- -- -- * -- -- -- -- --		
7	448146	Plate, Side L.H. Top		
8	792572	Panel Assy., Rear		
		(A-P)		
	31-119918-0208	Screw, Mach. Pan Hd.		
	31-119918-0210	Screw, Mach. Pan Hd.		
	1-216741-430	Lockwasher, Spring		
	31-119998-02	Nut, Hex		
		-- -- -- -- -- * -- -- -- -- --		
9	648077	Plate Assy., Shelf		
10	448147	Plate, Side, R.H. Top		
		(A-P)		
	1-216741-430	Lockwasher, Spring		
	31-119998-02	Nut, Hex		
	31-119920-0210	Screw, Mach. Fl. Hd.		
		-- -- -- -- -- * -- -- -- -- --		
11	347958	Spacer, Side Plate		
		(A-P)		
	31-119920-0212	Screw, Mach. Fl.Hd.		
	31-119920-0216	Screw, Mach. Fl.Hd.		
	1-216741-430	Lockwasher, Spring		
	31-119998-02	Nut, Hex		
		-- -- -- -- -- * -- -- -- -- --		
12	246840	Block, Tapped		
		(A-P)		
	1-216741-420	Lockwasher, Spring		
	31-119918-6206	Screw, Mach. Pan Hd.		
		-- -- -- -- -- * -- -- -- -- --		

EXPLODED VIEW PARTS LIST
PAPER MAGAZINE ASSEMBLY - 892628 (VERTICAL OSCILLOGRAPH)
FIGURE 7-11 (continued)

ITEM NUMBER	PART NUMBER	DESCRIPTION	SYMBOL NUMBER	USED ON
13	446843	Bracket, L.H. (A-P)		
	31-119920-0207	Screw, Mach. Fl. Hd.		
		-- -- -- -- -- * -- -- -- -- --		
14	347992	Plate, Support (A-P)		
	1-216741-430	Lockwasher, Spring		
	31-119998-02	Nut, Hex		
	31-119920-0208	Screw, Mach. Fl. Hd.		
		-- -- -- -- -- * -- -- -- -- --		
15	343122-910	Plate Assy., Back (A-P)		
	31-119998-02	Nut, Hex		
	31-119918-0208	Screw, Mach., Pan Hd.		
	1-216741-430	Lockwasher, Spring		
	1-118195-309	Washer, Plain		
		-- -- -- -- -- * -- -- -- -- --		
16	348043-2	Bezel, Upper Right (A-P)		
	13-249640-8204	Screw, Fl. Hd.		
	31-119920-6206	Screw, Mach. Fl. Hd.		
		-- -- -- -- -- * -- -- -- -- --		
17	342140	Spacer, Side Plate (A-P)		
	1-216741-430	Lockwasher, Spring		
	31-119998-02	Nut, Hex		
	31-119920-0406	Screw, Mach. Fl. Hd.		
	31-119920-0212	Screw, Mach. Fl. Hd.		
		-- -- -- -- -- * -- -- -- -- --		
18	448371-1	Slide, Rack, Set (A-P)		
	1-216741-430	Lockwasher, Spring		
	31-119998-02	Nut, Hex		
	31-119920-0210	Screw, Mach. Fl. Hd.		
		-- -- -- -- -- * -- -- -- -- --		
19	446844	Bracket, R.H. (A-P)		
	31-119920-0207	Screw, Mach. Fl. Hd.		
	31-119998-82	Nut, Hex		
		-- -- -- -- -- * -- -- -- -- --		
20	441716	Plate, Side R.H. Bottom (A-P)		
	31-119920-8204	Screw, Mach. Fl. Hd.		
		-- -- -- -- -- * -- -- -- -- --		
21	748019	Roll Assembly, Press. (A-P)		
	113230	Screw, 1/4-20 Special		
	31-131131-4506	Screw, Mach. Fl. Hd.		
		-- -- -- -- -- * -- -- -- -- --		

EXPLODED VIEW PARTS LIST
PAPER MAGAZINE ASSEMBLY - 892628 (VERTICAL OSCILLOGRAPH)
FIGURE 7-11 (continued)

ITEM NUMBER	PART NUMBER	DESCRIPTION	SYMBOL NUMBER	USED ON
22	128721	Bearing, Ball, Flanged		
23	241462	Pin, Arm, Pivot		
24	241707	Gearshaft, Spur		
		(A-P)		
	2-240731-4	Ring, Retaining, Ext.		
		-- -- -- -- -- * -- -- -- -- --		
25	241709	Gearshaft, Spur		
26	647949	Housing Assy., Mech. Drive		
27	246881	Shim		
28	341087-910	Roller Assy., Drive		
29	131825	Shaft, Paper Guide		
		(A-P)		
	113230	Screw, 1/4-20 Special		
	31-131131-4506	Screw, Mach. Fl. Hd.		
		-- -- -- -- -- * -- -- -- -- --		
30	647975-1	Panel Assy., Bottom Front		
		(A-P)		
	31-119920-4007	Screw		
		-- -- -- -- -- * -- -- -- -- --		
31	447986	Bracket, Panel, Mtg.		
		(A-P)		
	31-119918-8206	Screw, Mach. Pan Hd.		
	1-216741-425	Lockwasher, Spring		
	1-118195-307	Washer		
		-- -- -- -- -- * -- -- -- -- --		
32	247985	Strip, Tapped		
33	341897	Paper, Chute		
34	247950	Plate, Retaining		
		(A-P)		
	31-119920-6204	Screw, Mach. Fl. Hd.		
	1-216741-420	Lockwasher, Spring		
		-- -- -- -- -- * -- -- -- -- --		
35	647954	Pulley Assy.		
		(A-P)		
	14-119923-6203	Screw, Set Headless		
		-- -- -- -- -- * -- -- -- -- --		
36	242029	Screw, Thumb		
37	348045-2	Bezel, Upper Left		
		(A-P)		
	31-119920-6206	Screw, Mach. Fl. Hd.		
	13-249640-8204	Screw, Fl. Hd.		
		-- -- -- -- -- * -- -- -- -- --		

EXPLODED VIEW PARTS LIST
PAPER MAGAZINE ASSEMBLY - 892628 (VERTICAL OSCILLOGRAPH)
FIGURE 7-11 (continued)

ITEM NUMBER	PART NUMBER	DESCRIPTION	SYMBOL NUMBER	USED ON
38	492575	Panel, Front		
		(A-P)		
	31-119920-6210	Screw, Mach. Fl. Hd.		
	1-118195-305	Washer, Plain		
	31-119998-62	Nut, Hex		
	1-216741-420	Lockwasher, Spring		
		-- -- -- -- -- * -- -- -- -- --		
39	647988	Plate Assy., L.H. Bottom		
40	341772	Bracket, Angle		
41	16-211473-102	Resistor, Variable		
		(A-P)		
	1-120052-211	Lockwasher, Int. Tooth		
	25-106766-1	Nut, Hex		
		-- -- -- -- -- * -- -- -- -- --		
42	647957	Spacer Assy.		
43	124804-3	Clamp, Cable		

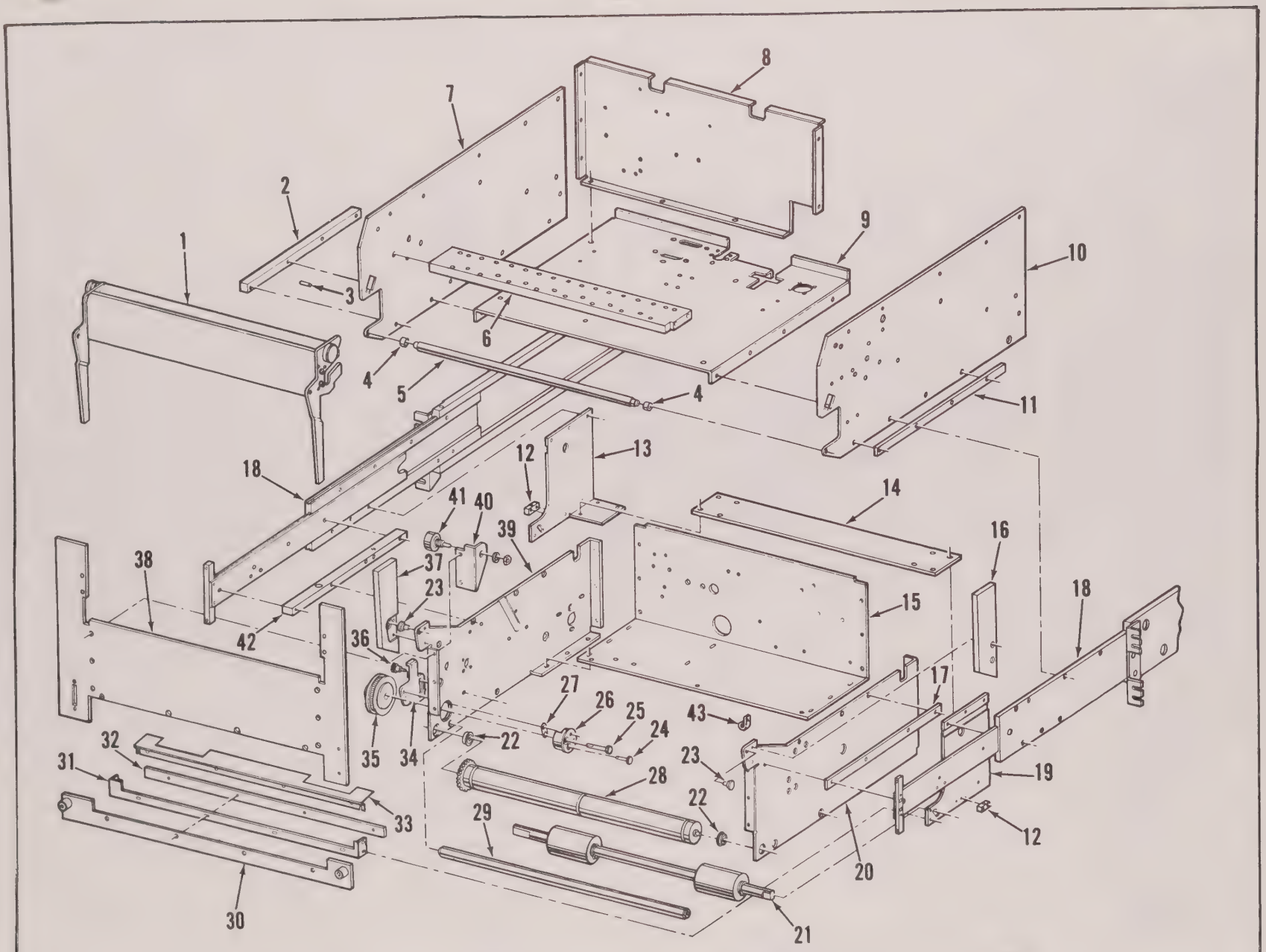

FIGURE 7-11 PAPER MAGAZINE ASSEMBLY - 892628 (VERTICAL OSCILLOGRAPH)

EXPLODED VIEW PARTS LIST
BAR ASSEMBLY, WRITING - 342385 (VERTICAL OSCILLOGRAPH)
FIGURE 7-12

ITEM NUMBER	PART NUMBER	DESCRIPTION	SYMBOL NUMBER	USED ON
	342385	Bar Assembly, Writing		
1	131796	Spring, Friction Plate (A-P)		
	31-119998-82	Nut, Hex		
	31-119918-8218	Screw, Phillips		
	1-216741-425	Lockwasher, Spring		
	31-119922-8212	Screw, Cap		
		-- -- -- -- -- * -- -- -- -- --		
2	113252	Plate, Friction		
3	127956	Plate, Friction-Tension Roller		
4	242296	Spacer, Screw		
5	1-210761-1	Bearing		
6	341385	Roller, Paper Tension		
	342181-910	Bar Subassy., Writing		
7	341450	Arm, Locking, Right (A-P)		
	31-230773-0208	Screw, Cap		
		-- -- -- -- -- * -- -- -- -- --		
8	341300	Bar, Writing		
9	1-214148-2	Pin, Dowel		
10	241455-910	Arm Assy., Locking (A-P)		
	31-230773-0208	Screw, Cap		
		-- -- -- -- -- * -- -- -- -- --		
11	129394	Retainer, Bearing (A-P)		
	31-119918-6207	Screw, Mach.		
	1-216741-420	Lockwasher, Spring		
		-- -- -- -- -- * -- -- -- -- --		

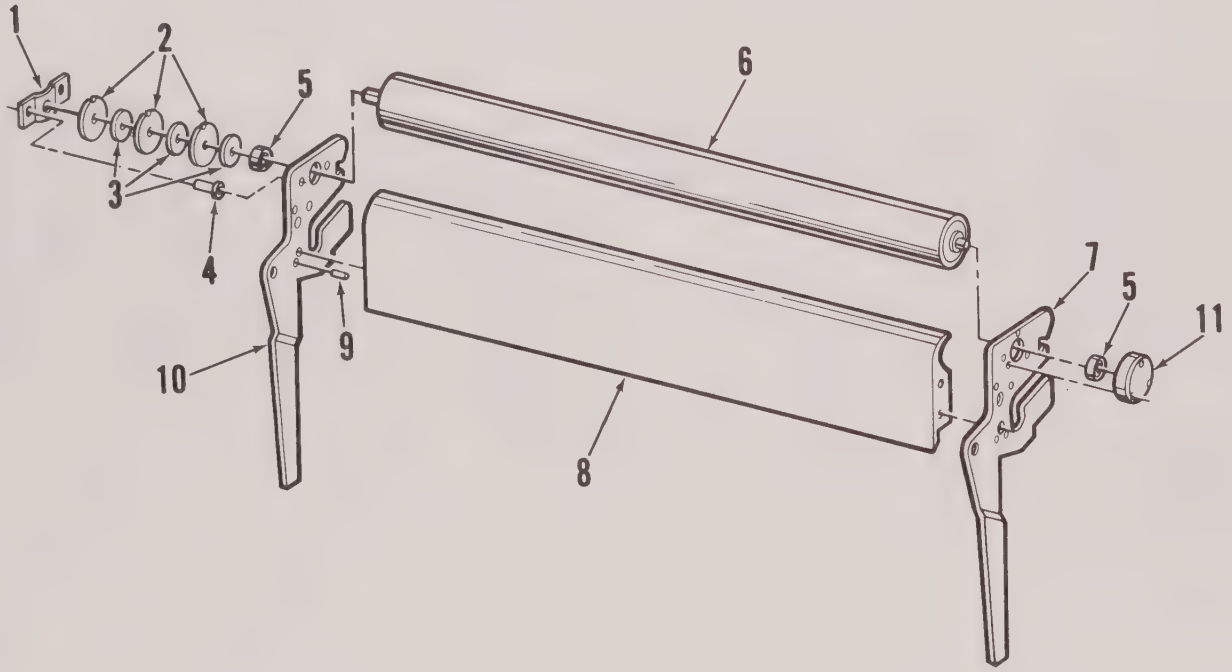

FIGURE 7-12 BAR ASSEMBLY, WRITING - 342385 (VERTICAL OSCILLOGRAPH)

EXPLODED VIEW PARTS LIST
OSCILLOGRAPH ASSEMBLY, HORIZONTAL INK WRITING
MODEL XXXX-2607-61
FIGURE 7-13

ITEM NUMBER	PART NUMBER	DESCRIPTION	SYMBOL NUMBER	USED ON
	0000-2607-61	Oscillograph Assembly, Horizontal Ink Writing		
	792651-1	Bar Assy., Event Marker - For 1111*		
	792651-2	Bar Assy., Event Marker - For 1122*		
	792651-3	Bar Assy., Event Marker - For 1222*		
	792651-4	Bar Assy., Event Marker - For 2222*		
1	892467	Bar, Mtg. (part of 792651-1)		
	892466	Bar, Mtg. (part of 792651-2)		
	892460	Bar, Mtg. (part of 792651-3)		
	892894	Bar, Mtg. (part of 792651-4)		
2	792567	Event Marker (A-P)		
	31-119914-2608	Screw		
		-- -- -- -- -- * -- -- -- -- --		
3		Tube		
	792643	Kit Assy., Penmotor 80mm		
4	892313	Penmotor Assy.		
5	789763	Pen Assy., Ink		
6	667630-1	Tube		
7	684853	Saddle		
8	292444	Spacer		
9	1-216741-425	Lockwasher, Spring		
10	31-119922-8214	Screw, Cap Hex Soc. Hd.		
11	288755-105	Capacitor (used on 886220)		
	792642	Kit Assy., Penmotor 40mm		
12	891967	Penmotor Assy.		
13	789763	Pen Assy., Ink		
14	667630	Tube		
15	686536	Saddle		
16	1-216741-430	Lockwasher, Spring		
17	31-119922-0212	Screw, Cap- Hex Soc. Hd.		
18	243154	Ring, Anti-Jamming		
19	232985	Catch, Friction		
20	232342	Housing, Ball Catch (A-P)		
	31-119920-6208	Screw, Mach. Flat Hd.		
		-- -- -- -- -- * -- -- -- -- --		
21	448228	Table, Viewing (A-P)		
	31-119920-8206	Screw, Mach. Flat Hd.		
		-- -- -- -- -- * -- -- -- -- --		
22	747541	Bar Assy., Writing		
		-- -- -- -- -- * -- -- -- -- --		

* 1111 - Four 80 mm penmotors & drive amplifiers.
1122 - Two 80 mm & four 40 mm penmotors & drive amplifiers.
1222 - One 80 mm & six 40 mm penmotors & drive amplifiers.
2222 - Eight 40 mm penmotors & drive amplifiers.

EXPLODED VIEW PARTS LIST
OSCILLOGRAPH ASSEMBLY, HORIZONTAL INK WRITING
MODEL XXXX-2607-61
FIGURE 7-13 (continued)

ITEM NUMBER	PART NUMBER	DESCRIPTION	SYMBOL NUMBER	USED ON
23	332984-910	Shaft Assy., Supply Roll (see Figure 7-15)		
24	447832	Cover, Back		
		(A-P)		
	31-119918-6204	Screw, Mach. Fl. Hd.		
	1-216741-420	Lockwasher, Spring		
		-- -- -- -- -- * -- -- -- -- --		
25	891971	Bracket Assy., Shield (for use on 2222)*		
	892464	Bracket Assy., Shield (for use on 1222)*		
	892463	Bracket Assy., Shield (for use on 1122)*		
	892465	Bracket Assy., Shield (for use on 1111)*		
		(A-P)		
		Screw		
		Lockwasher, Spring		
		-- -- -- -- -- * -- -- -- -- --		
26	892766	Recorder Subassy. (see Figure 7-14)		
27	242723-910	Tool Assy., Spanner		
28	847697-3	Cover Assy., Right Side		
		(A-P)		
	1-216741-420	Lockwasher, Spring		
	1-118195-305	Washer, Plain		
	31-119918-6206	Screw, Mach. Pan Hd.		
		-- -- -- -- -- * -- -- -- -- --		
29	892836	Harness Assy., Complete, (see Figure 7-16)		
		(A-P)		
	31-261575-8208	Screw, Truss Hd.		
	1-216741-420	Lockwasher, Spring		
	31-119918-6208	Screw, Mach. Pan Hd.		
	1-118195-305	Washer, Plain		
	31-119918-4005	Screw, Mach. Pan Hd.		
	1-216741-411	Lockwasher, Spring		
	1-118195-304	Washer, Plain		
	31-119918-8206	Screw, Mach. Pan Hd.		
	1-216741-425	Lockwasher, Spring		
	31-119918-8208	Screw, Mach. Pan Hd.		
		-- -- -- -- -- * -- -- -- -- --		
30	247422-3	Angle, Front Frame		
		(A-P)		
	31-119920-6208	Screw, Mach. Fl. Hd.		
		-- -- -- -- -- * -- -- -- -- --		
	748259-1	Bezel Assy.		
		(A-P)		
	31-118918-0208	Screw, Mach. Pan Hd.		
	1-216741-430	Lockwasher, Spring		
	31-119920-0208	Screw, Mach. Fl. Hd.		
		-- -- -- -- -- * -- -- -- -- --		
31	448240-1	Frame, Front		

EXPLODED VIEW PARTS LIST
OSCILLOGRAPH ASSEMBLY, HORIZONTAL INK WRITING
MODEL XXXX-2607-61
FIGURE 7-13 (continued)

ITEM NUMBER	PART NUMBER	DESCRIPTION	SYMBOL NUMBER	USED ON
32	240161-424	Pin, Straight, Headless		
33	247536	Spring, Trigger		
34	247426	Trigger, Slide Actuating		
35	248253	Plate		
		(A-P)		
	31-119920-4004	Screw, Mach. Fl. Hd.		
		-- -- -- -- -- * -- -- -- -- --		
36	247491	Block, Threaded		
		(A-P)		
	31-119918-6210	Screw, Mach. Pan Hd.		
	1-118195-305	Washer, Plain		
	1-216741-420	Lockwasher, Spring		
		-- -- -- -- -- * -- -- -- -- --		
37	847559-3	Chute Assy., Upper Paper		
38	847558-3	Chute Assy., Lower Paper		
		(A-P for items 37 & 38)		
	1-216741-420	Lockwasher, Spring		
	31-119918-6206	Screw, Mach. Pan Hd.		
	31-119920-6204	Screw, Mach. Flat Hd.		
		-- -- -- -- -- * -- -- -- -- --		
39	847698-3	Cover Assy., Left Side		
		(A-P)		
	1-216741-420	Lockwasher, Spring		
	1-118195-305	Washer, Plain		
	31-119918-6206	Screw, Mach. Pan Hd.		
		-- -- -- -- -- * -- -- -- -- --		
40	124804-50	Clamp, Cable		
		(A-P)		
	1-216741-420	Lockwasher, Spring		
	1-118195-305	Washer, Plain		
	31-119918-6204	Screw, Mach. Pan Hd.		
		-- -- -- -- -- * -- -- -- -- --		

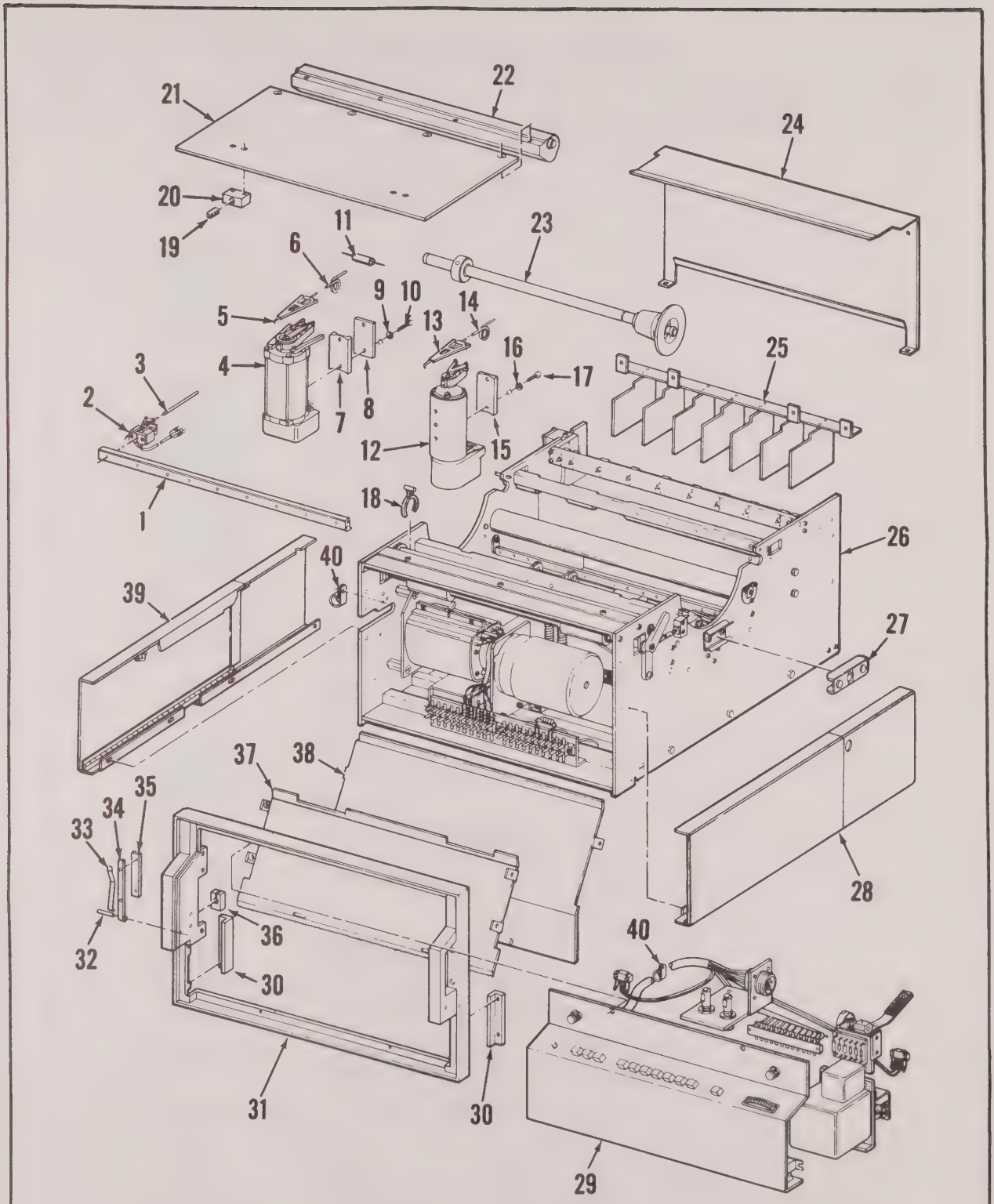

FIGURE 7-13 OSCILLOGRAPH ASSEMBLY, HORIZONTAL - XXXX-2607-61

EXPLODED VIEW PARTS LIST
RECORDER SUBASSEMBLY - 892766 (HORIZONTAL OSCILLOGRAPH)
FIGURE 7-14

ITEM NUMBER	PART NUMBER	DESCRIPTION	SYMBOL NUMBER	USED ON
	892766	Recorder Subassembly		
	847429	Plate Assy., L. Side (A-P)		
	31-119924-4512	Screw, Hex		
	10-120053-106	Lockwasher, Ext.		
	240132	Screw, Shoulder		
	1-216741-445	Lockwasher, Spring		
	31-119920-4508	Screw, Mach. Fl. Hd.		
		-- -- -- -- -- * -- -- -- -- --		
1	446593	Plate, Left Side		
2	240133-1	Bearing, Sleeve-Flanged		
3	130540-82	Nut, Self-Locking		
4	6-119817-908	Pin, Grooved		
5	6-119817-904	Pin, Grooved		
6	6-119817-910	Pin, Grooved		
7	240035	Bushing		
8	240032	Link, Pressure Roll (A-P)		
	1-216741-425	Lockwasher, Spring		
	31-119918-8210	Screw, Mach.		
	1-118195-305	Washer, Plain		
		-- -- -- -- -- * -- -- -- -- --		
9	240078	Spacer		
10	128418	Cam, Pressure Roll		
11	240033	Screw, Special Roll		
12	2-240031-1	Spring, Helical, Ext.		
13	240034	Screw, Special		
14	31-119918-82	Nut, Hex		
15	240077	Block, Spring Retainer (A-P)		
	31-119920-6210	Screw, Mach.		
		-- -- -- -- -- * -- -- -- -- --		
16	247918	Stud, Ball		
17	247663	Spacer, Door Catch		
18	31-119923-0210	Screw, Set		
19	229880-910	Bracket Assy., Roll Adj. (A-P)		
	1-216741-425	Lockwasher, Spring		
	31-119918-8208	Screw, Mach.		
		-- -- -- -- -- * -- -- -- -- --		
20	130534	Screw, Shoulder		
21	127124	Bracket (A-P)		
	31-119918-8204	Screw, Mach.		
	1-216741-425	Lockwasher, Spring		
		-- -- -- -- -- * -- -- -- -- --		

EXPLODED VIEW PARTS LIST
RECORDER SUBASSEMBLY - 892766 (HORIZONTAL OSCILLOGRAPH)
FIGURE 7-14 (continued)

ITEM NUMBER	PART NUMBER	DESCRIPTION	SYMBOL NUMBER	USED ON
22	113252	Plate, Friction		
23	127956	Plate, Friction		
24	244529	Plate, Friction		
25	492462	Bar, Mtg. Penmotor (A-P)		
	31-119924-4512	Screw, Hex Hd.		
	10-120053-106	Lockwasher, Ext.		
		-- -- -- -- -- * -- -- -- -- --		
26	347380	Bar, Rear Cover Mtg. Top (A-P)		
	1-216741-425	Lockwasher, Spring		
	31-119918-8208	Screw, Mach.		
		-- -- -- -- -- * -- -- -- -- --		
27	124804	Clamp, Cable (A-P)		
	1-118195-305	Washer, Plain		
	31-119918-6212	Screw, Mach.		
	1-216741-420	Lockwasher, Spring		
	31-119998-62	Nut, Hex		
		-- -- -- -- -- * -- -- -- -- --		
28	1-210761-1	Bearing, Ball		
29	346091	Bracket, Conn. (A-P)		
	31-119998-82	Nut, Hex		
	31-119920-8206	Screw, Mach.		
	1-216741-425	Lockwasher, Spring		
		-- -- -- -- -- * -- -- -- -- --		
30	232983	Plate, Supporting (A-P)		
	1-216741-425	Lockwasher, Spring		
	31-119920-8206	Screw, Mach.		
		-- -- -- -- -- * -- -- -- -- --		
31	847425	Manifold Assy., Complete (see Figure 7-17) (A-P)		
	31-119918-6206	Screw, Mach.		
	1-216741-420	Lockwasher, Spring		
	31-119918-4008	Screw, Mach.		
	1-216741-411	Lockwasher, Spring		
32	247406	Bolt, Shoulder		
		-- -- -- -- -- * -- -- -- -- --		
33	243893	Shape, Extruded (A-P)		
	31-119918-0206	Screw, Mach.		
		-- -- -- -- -- * -- -- -- -- --		

EXPLODED VIEW PARTS LIST
RECORDER SUBASSEMBLY - 892766 (HORIZONTAL OSCILLOGRAPH)
FIGURE 7-14 (continued)

ITEM NUMBER	PART NUMBER	DESCRIPTION	SYMBOL NUMBER	USED ON
34	447385	Bar, Rear Cover		
		(A-P)		
	20-119922-4004	Screw, Cap		
	31-119918-0206	Screw, Mach.		
	1-216741-430	Lockwasher, Spring		
		-- -- -- -- -- * -- -- -- -- --		
35	227118	Roll, Tension-Paper		
	647465	Switch Assy., Table Interlock		
		(A-P)		
	31-119914-2607	Screw, Mach.		
	1-118195-303	Washer, Plain		
	1-216741-402	Lockwasher, Spring		
		-- -- -- -- -- * -- -- -- -- --		
36	265840-1	Terminal Lug		
37	129638	Switch, Sens.		
38	128721	Bearing, Ball Flanged		
39	340270-910	Roller Assy.		
	847427	Plate Assy., Right Side		
		(A-P)		
	31-119920-4508	Screw, Mach.		
	31-119924-4512	Screw, Hex		
	10-120053-106	Lockwasher, Ext.		
	240132	Screw, Shoulder		
	1-216741-445	Lockwasher, Spring		
		-- -- -- -- -- * -- -- -- -- --		
40	6-119817-904	Pin, Grooved		
41	6-119817-910	Pin, Grooved		
42	446592	Plate, Right Side		
43	127115	Cover, Ball Bearing		
		(A-P)		
	1-216741-420	Lockwasher, Spring		
	31-119918-6204	Screw, Mach.		
		-- -- -- -- -- * -- -- -- -- --		
44	242722	Bracket		
		(A-P)		
	31-119918-8204	Screw		
	1-216741-425	Lockwasher, Spring		
		-- -- -- -- -- * -- -- -- -- --		
45	248238	Handle, Pressure		
		(A-P)		
	31-119920-6204	Screw, Mach.		
		-- -- -- -- -- * -- -- -- -- --		

EXPLODED VIEW PARTS LIST
RECORDER SUBASSEMBLY - 892766 (HORIZONTAL OSCILLOGRAPH)
FIGURE 7-14 (continued)

ITEM NUMBER	PART NUMBER	DESCRIPTION	SYMBOL NUMBER	USED ON
46	845394	Arm Assy., Paper Drag (A-P)		
	1-216741-425	Lockwasher, Spring		
	31-119920-8206	Screw, Mach.		
		-- -- -- -- -- * -- -- -- -- --		
47	245385	Bracket, Supply Brake		
48	245882	River, Shoulder		
49	3-227070-6	Ring, Retaining		
50	127050	Shaft, Weight		
51	345386	Arm, Paper Drag		
52	245383	Pad		
53	247387	Bar, Weight-Mount Tie (A-P)		
	31-119924-4512	Screw, Hex		
	10-120053-106	Lockwasher, Ext.		
		-- -- -- -- -- * -- -- -- -- --		
54	245386	Spring		
55	232780-4	Packing, Preformed		
56	265814-10	Terminal Board (A-P)		
	31-119918-6209	Screw, Mach.		
	1-216741-420	Lockwasher, Spring		
	3-119998-62	Nut, Hex		
		-- -- -- -- -- * -- -- -- -- --		
57	265840-2	Terminal Lug		
58	5-115558-101	Resistor		
59	232240	Spacer (A-P)		
	31-119920-0208	Screw, Mach.		
		-- -- -- -- -- * -- -- -- -- --		
60	248851	Guide		
61	248852	Spring		
62	848214-1	Chassis Assy., Note Pad (A-P)		
	1-216741-420	Lockwasher, Spring		
	31-119918-6206	Screw, Mach.		
		-- -- -- -- -- * -- -- -- -- --		
63	348853-1	Clip (A-P)		
	31-119916-2604	Screw, Mach.		
		-- -- -- -- -- * -- -- -- -- --		

EXPLODED VIEW PARTS LIST
RECORDER SUBASSEMBLY - 892766 (HORIZONTAL OSCILLOGRAPH)
FIGURE 7-14 (continued)

ITEM NUMBER	PART NUMBER	DESCRIPTION	SYMBOL NUMBER	USED ON
64	340037-910	Roller Assy. (Includes items listed below)		
	340036	Shaft, Press. Roll		
	227940-2	Ring		
	11-109142-3	Washer		
	227057-910	Bearing Assy.		
	240302	Sleeve, Pressure Roll		
	14-119923-8202	Screw, Set		
65	128967-1	Washer, Plain, Nylon		
		(See Sheet 2)		
66	848862	Timer Assy., (see Figure 7-25) (A-P)		
	31-119918-8204	Screw, Mach.		
	1-216741-425	Lockwasher, Spring		
		-- -- -- -- -- * -- -- -- -- --		
67	232247-910	Plate Assy., Bearing		
	747466	Transmission Assy., Complete (A-P)		
	31-119922-8208	Screw, Cap		
	1-216741-425	Lockwasher, Spring		
		-- -- -- -- -- * -- -- -- -- --		
68	232241	Gear, Pinion (A-P)		
	4-217274-305	Pin, Spring		
		-- -- -- -- -- * -- -- -- -- --		
69	432322-915	Transmission Assy.		
70	265840-1	Terminal Lug, Recp.		
71	232243	Gear, Spur		
72	240508	Gear Shaft, Spur		
73	230995	Spacer		
74	232260-910	Gear Assy., Idler		
75	242164	Guard, Splash		
76	127913	Coupling, Universal (A-P)		
	14-119923-6203	Screw, Set		
		-- -- -- -- -- * -- -- -- -- --		
77	123695	Core, Coupling		
78	127912	Coupling, Unviersal		
79	127911	Post, Mtg.		
80	127091	Block, Motor Mtg. (A-P)		
	31-119922-0214	Screw, Cap		
	1-216741-430	Lockwasher, Spring		
		-- -- -- -- -- * -- -- -- -- --		

EXPLODED VIEW PARTS LIST
RECORDER SUBASSEMBLY - 892766 (HORIZONTAL OSCILLOGRAPH)
FIGURE 7-14 (continued)

ITEM NUMBER	PART NUMBER	DESCRIPTION	SYMBOL NUMBER	USED ON
81	240231-910	Strap Assy.		
		(A-P)		
	31-119918-6212	Screw, Mach.		
	1-216741-430	Lockwasher		
		-- -- -- -- -- * -- -- -- -- --		
	647443	Capacitor Assy., Motor		
82	127852	Capacitor, Fixed		
83	265840-2	Terminal Lug		
84	232228	Plate, Motor Mtg.		
		(A-P)		
	31-119922-0214	Screw, Cap		
	31-119920-0206	Screw, Mach.		
	1-216741-430	Lockwasher, Spring		
	31-119922-0208	Screw, Cap		
		-- -- -- -- -- * -- -- -- -- --		
	647464	Motor Assy.		
		(A-P)		
	31-119924-0406	Screw, Cap		
	31-119918-6212	Screw, Mach.		
		-- -- -- -- -- * -- -- -- -- --		
85	317713-2	Motor, Hysteresis Sync.		
86	265840-2	Lug, Terminal		
87	747468	Switch Assy., Interlock		
		(A-P)		
	31-119918-6204	Screw, Mach.		
	1-216741-420	Lockwasher		
		-- -- -- -- -- * -- -- -- -- --		
88	10-127070-3	Ring, Retaining		
89	20-119922-6208	Screw		
90	128022	Washer		
91	240473	Arm, Roller		
92	140881	Shaft		
93	140466	Roller		
94	240472	Spring		
95	2-214148-5	Pin, Dowel		
96	140465	Spacer		
	647444	Switch Subassy.		
		(A-P)		
	31-119914-2610	Screw, Mach.		
	31-118195-303	Washer		
	1-216741-402	Lockwasher, Spring		
		-- -- -- -- -- * -- -- -- -- --		
97	129900	Switch, Sensitive		
98	265840-1	Terminal, Lug		

EXPLODED VIEW PARTS LIST
RECORDER SUBASSEMBLY - 892766 (HORIZONTAL OSCILLOGRAPH)
FIGURE 7-14 (continued)

ITEM NUMBER	PART NUMBER	DESCRIPTION	SYMBOL NUMBER	USED ON
99	240471-910	Bracket Assy.		
100	892559	Bracket Assy., Mtg. (A-P)		
	31-119918-8204	Screw, Mach.		
	1-216741-425	Lockwasher, Spring		
		-- -- -- -- -- * -- -- -- -- --		
101	849432	Ink Supply Assy., Complete (see Figure 7-24) (A-P)		
	31-119918-8204	Screw, Mach.		
	1-216741-425	Lockwasher, Spring		
		-- -- -- -- -- * -- -- -- -- --		
102	245384	Bracket (A-P)		
	31-119918-6204	Screw, Mach.		
	1-216741-420	Lockwasher		
		-- -- -- -- -- * -- -- -- -- --		
103	347359	Spacer, Bar		
104	347360	Spacer, Bar - Motor (A-P)		
	1-216741-420	Lockwasher		
	31-119918-6206	Screw, Mach.		
		-- -- -- -- -- * -- -- -- -- --		
105	747398	Bracket Assy., Terminal Strip (A-P)		
	31-119918-6212	Screw, Mach.		
	1-216741-420	Lockwasher		
		-- -- -- -- -- * -- -- -- -- --		
106	749651	Bar Assy., Silkscreened (A-P)		
	1-216741-420	Lockwasher		
	31-119918-6206	Screw, Mach.		
		-- -- -- -- -- * -- -- -- -- --		
107	347396	Bar, Spacer (A-P)		
	1-216741-420	Lockwasher		
	31-119918-6206	Screw, Mach.		
		-- -- -- -- -- * -- -- -- -- --		
108	847392	Plate Assy., Bottom		
109	248436	Clamp, Cable (A-P)		
	31-119918-8212	Screw, Mach.		
	1-216741-425	Lockwasher, Spring		
	1-118195-305	Washer, Plain		
		-- -- -- -- -- * -- -- -- -- --		
110	4-112468-12	Pin, Spring		
111	747460	Bracket Assy., Silkscreen (A-P)		
	1-216741-420	Lockwasher		
	31-119918-6204	Screw, Mach.		
		-- -- -- -- -- * -- -- -- -- --		

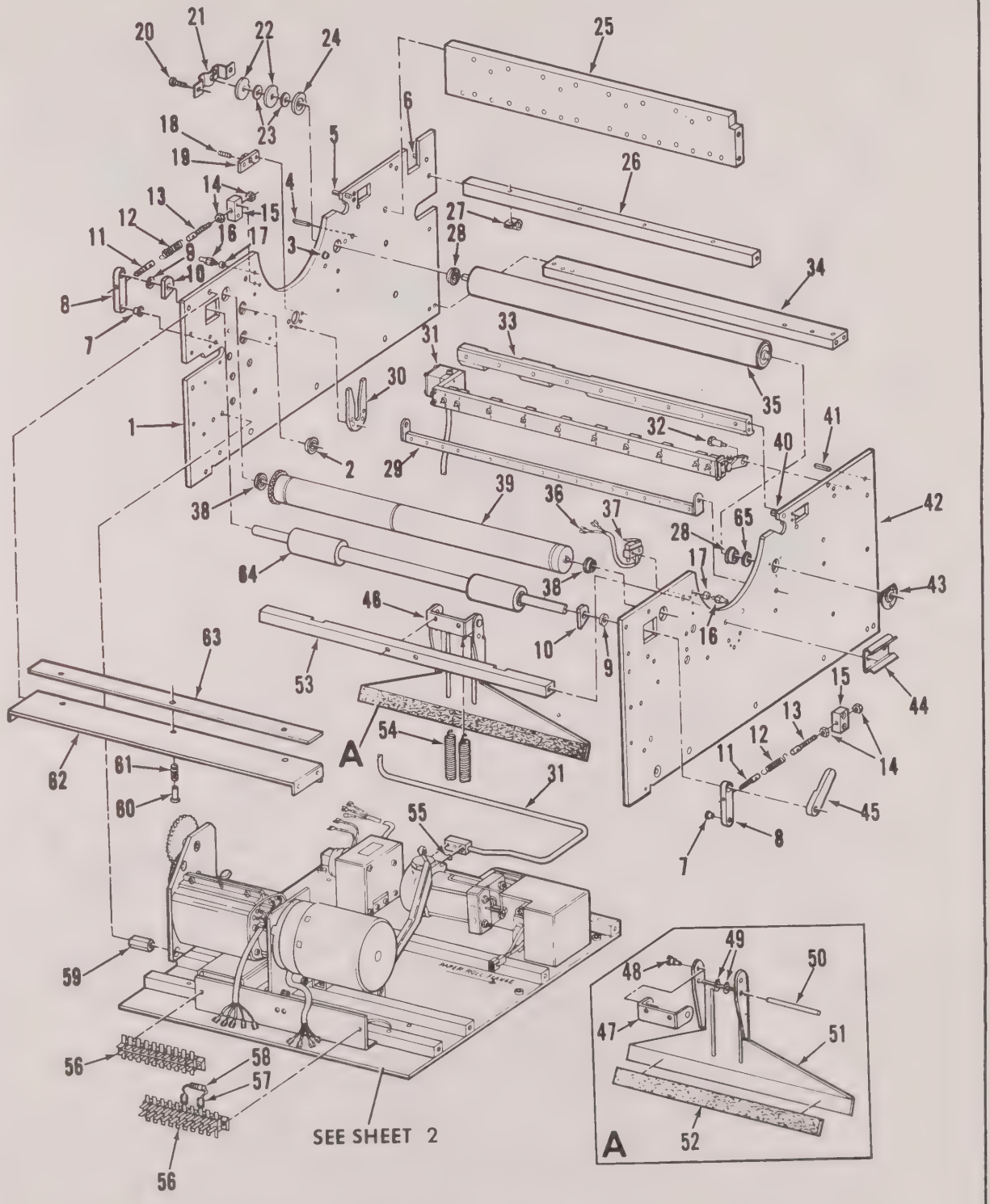

FIGURE 7-14 RECORDER SUBASSEMBLY - 892766 (HORIZONTAL OSCILLOGRAPH) 1 of 2

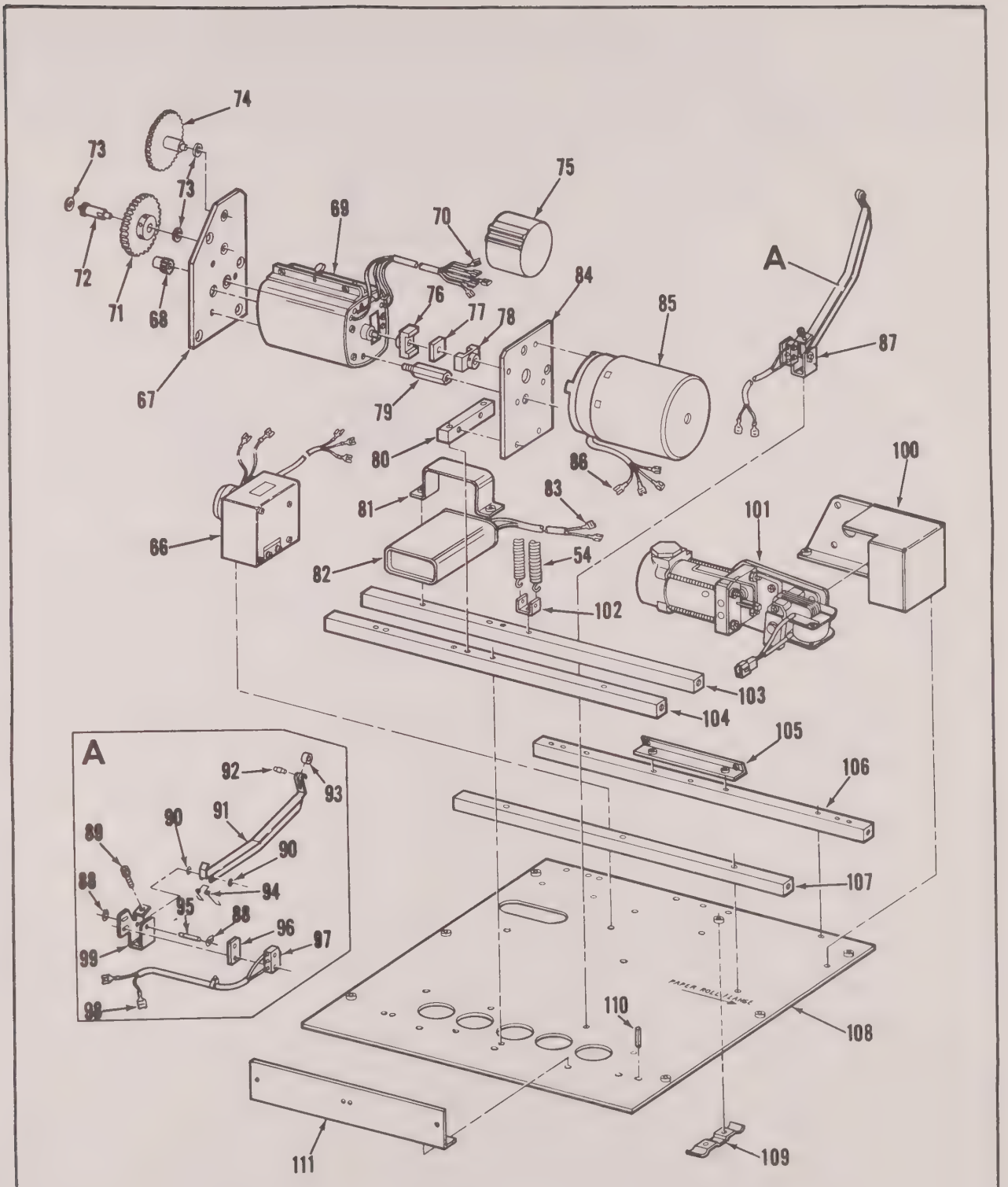

FIGURE 7-14 RECORDER SUBASSEMBLY - 892766 (HORIZONTAL OSCILLOGRAPH) 2 of 2

EXPLODED VIEW PARTS LIST
SHAFT ASSEMBLY, SUPPLY ROLL - 332984 (HORIZONTAL OSCILLOGRAPH)
FIGURE 7-15

ITEM NUMBER	PART NUMBER	DESCRIPTION	SYMBOL NUMBER	USED ON
	332984	Shaft Assembly, Supply Roll		
1	117695	Plunger		
2	7-104636-6	Ball		
3	232982	Shaft, Roll Supply		
4	227940-7	Ring		
5	127971-910	Hub Assy., Roller (A-P)		
	31-119923-6204	Screw		
		-- -- -- -- -- * -- -- -- -- --		
6	242102-910	Hub Assy., Supply Shaft		
7	127903	Spring, Compression		
8	127965	Slug, Bearing		
9	2-217274-305	Pin		

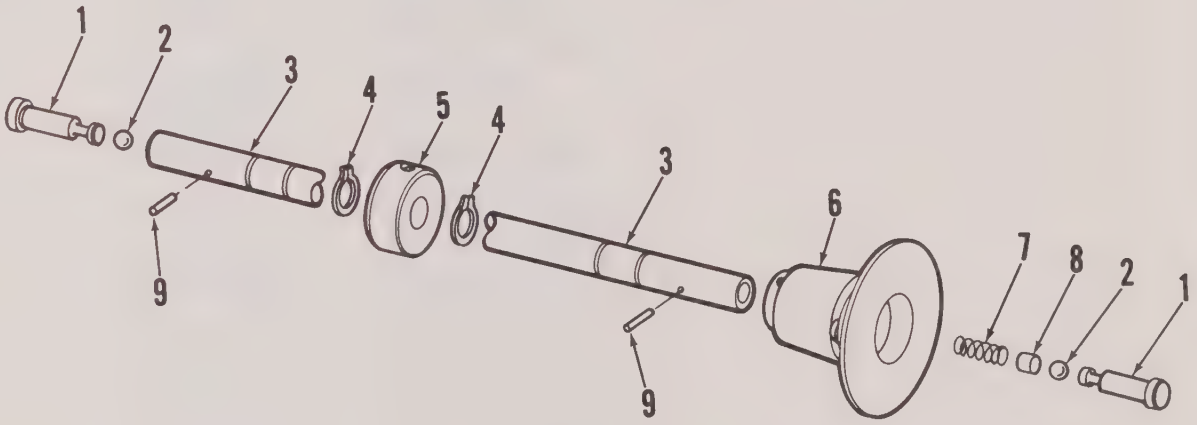

FIGURE 7-15 SHAFT ASSEMBLY, SUPPLY ROLL - 332984 (HORIZONTAL OSCILLOGRAPH)

EXPLODED VIEW PARTS LIST
HARNESS ASSEMBLY COMPLETE - 892836 (HORIZONTAL OSCILLOGRAPH)
FIGURE 7-16

ITEM NUMBER	PART NUMBER	DESCRIPTION	SYMBOL NUMBER	USED ON
	892836	Harness Assembly, Complete		
	892761	Panel Assy., Control		
1	285652-1	Knob Assy.		
2	1-241774-8	Lamp, Incandescent		
3	248808	Clip, Speed		
4	247917	Connector		
5	246343-6	Clip, Spring Tension		
		(A-P)		
	31-119998-40	Nut, Hex		
	1-216741-411	Lockwasher, Spring		
	31-119918-4005	Screw, Mach.		
		-- -- -- -- -- * -- -- -- -- --		
6	447522	Bracket, Lamp		
7	447940	Switch, Rotary		
8	124804-2	Clamp, Cable		
		(A-P)		
	31-119918-6206	Screw, Mach.		
	1-118195-305	Washer, Plain		
	31-119918-62	Nut		
	1-216741-420	Lockwasher, Spring		
		-- -- -- -- -- * -- -- -- -- --		
9	232155	Lampholder, Flourescent		
		(A-P)		
	31-119918-6204	Screw		
	1-216741-420	Lockwasher, Spring		
		-- -- -- -- -- * -- -- -- -- --		
10	231964	Starter		
11	231965	Socket, Starter		
		(A-P)		
	31-119918-4006	Screw, Mach.		
	1-216741-411	Lockwasher, Spring		
	31-119998-40	Nut, Hex		
		-- -- -- -- -- * -- -- -- -- --		
12	232136	Lamp, Fluorescent		
13	892683	Panel Assy.		
14	231962	Ballast, Lamp		
		(A-P)		
	1-216741-420	Lockwasher, Spring		
	31-119918-6206	Screw		
	1-118195-305	Washer, Plain		
	31-119998-62	Nut, Hex		
		-- -- -- -- -- * -- -- -- -- --		
15	230820-4	Plastic, Open Cell		

EXPLODED VIEW PARTS LIST
HARNESS ASSEMBLY COMPLETE - 892836 (HORIZONTAL OSCILLOGRAPH)
FIGURE 7-16 (continued)

ITEM NUMBER	PART NUMBER	DESCRIPTION	SYMBOL NUMBER	USED ON
16	248809	Socket, Molded		
	747851	Bracket, Assy., Electrical		
17	102625-9	Fuse, Type "3AG"		
18	129758	Holder, Fuse		
19	116198-8	Fuse, Slo-Blo		
20	11528-L-1	Lug		
21	121047	Connector, Male 19 Prongs (A-P)		
	31-119918-4006	Screw, Mach.		
	1-216741-411	Lockwasher, Spring		
	31-119998-40	Nut, Hex		
		-- -- -- -- -- * -- -- -- -- --		
22	747520	Bracket Assy.		
23	130198-1	Diode		
24	130168	Connector, Recep.		
25	124804-5	Clamp, Cable		
	124804-2	Clamp, Cable		
26	847880	Bracket Assy. (see Figure 7-18)		
	892654	Harness Subassy.		
27	265840-2	Terminal Lug		
28	265840-1	Terminal Lug		
29	265814-10	Terminal Board		
30	241616	Connector (A-P)		
	31-119918-6206	Screw, Mach.		
	1-216741-420	Lockwasher, Spring		
	31-119998-62	Nut, Hex		
		-- -- -- -- -- * -- -- -- -- --		
31	248361	Ammeter, D.C.		
32	347834	Switch, Pushbutton (A-P)		
	31-119918-6206	Screw, Mach.		
	1-216741-420	Lockwasher, Spring		
		-- -- -- -- -- * -- -- -- -- --		
33	246552-1	Button, Push		

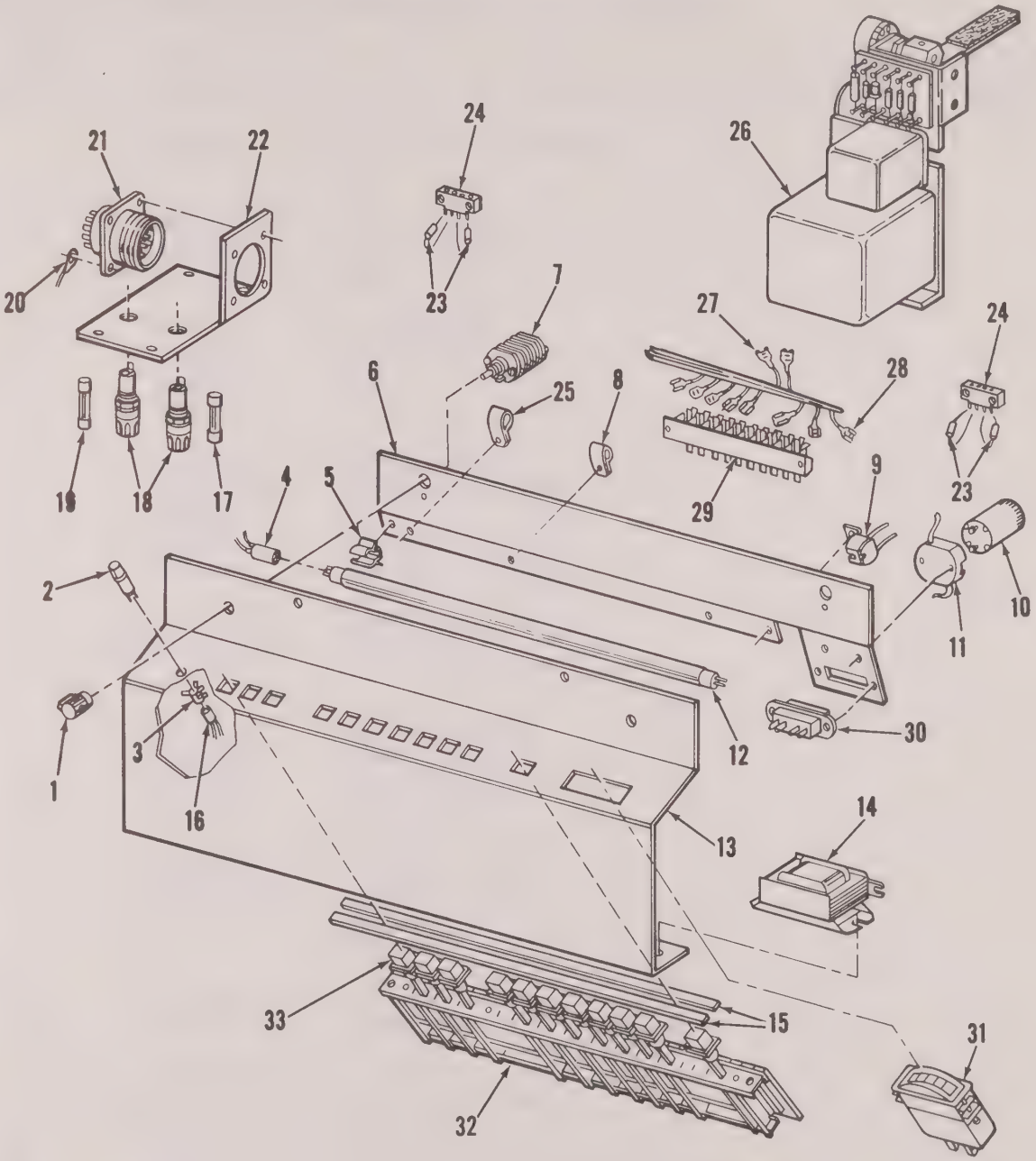

FIGURE 7-16 HARNESS ASSEMBLY COMPLETE - 892836 (HORIZONTAL OSCILLOGRAPH)

EXPLODED VIEW PARTS LIST
MANIFOLD ASSEMBLY - 847425 (HORIZONTAL OSCILLOGRAPH)
FIGURE 7-17

ITEM NUMBER	PART NUMBER	DESCRIPTION	SYMBOL NUMBER	USED ON
	847425	Manifold Assembly, Complete		
1	244673	Cover		
		(A-P)		
	31-119914-2614	Screw, Pan Head		
	1-216741-402	Lockwasher, Spring		
	31-119914-2610	Screw		
		-- -- -- -- -- * -- -- -- -- --		
2	244688	Spring, Helical		
3	744679	Bellows Assy.		
4	244657	Spring		
5	244655	Valve, Check		
6	232780-7	Packing, Preformed		
7	240707-4004	Screw, Assembled Washer		
8	344660	Body, Valve		
9	232780-2	Packing, Preformed		
10	847419	Tube Assy., Ink Supply		
		(A-P)		
	1-216741-411	Lockwasher, Spring		
	31-119918-4006	Screw, Mach.		
		-- -- -- -- -- * -- -- -- -- --		
11	241837	Cap, End-Manifold		
12	232780-4	Packing, Preformed		
13	242421	Support, Manifold		
14	241836	Arm, Manifold		
		(A-P)		
	20-119922-6205	Screw, Cap		
	1-216741-420	Lockwasher, Spring		
		-- -- -- -- -- * -- -- -- -- --		
15	241843	Nipple, Valve		
16	342156-910	Bar Assy.		
17	241845	Retainer, Seal		
		(A-P)		
	31-119918-4005	Screw, Mach.		
	1-216741-411	Lockwasher, Spring		
		-- -- -- -- -- * -- -- -- -- --		
18	241844	Valve, Manifold		
19	341847	Manifold		

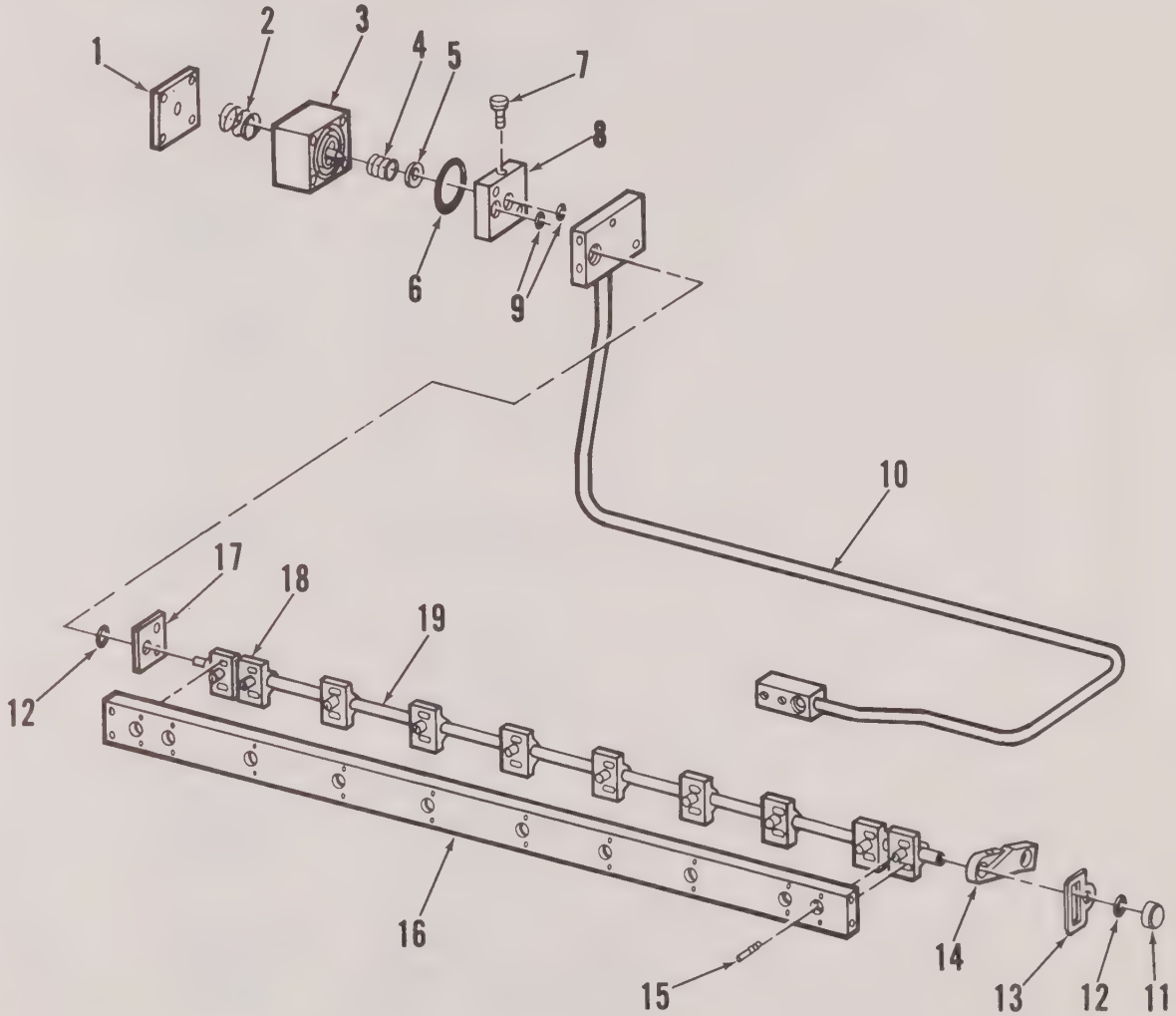

FIGURE 7-17 MANIFOLD ASSEMBLY 847425 (HORIZONTAL OSCILLOGRAPH)

EXPLODED VIEW PARTS LIST
BRACKET ASSEMBLY, ELECTRICAL - 847880 (HORIZONTAL OSCILLOGRAPH)
FIGURE 7-18

ITEM NUMBER	PART NUMBER	DESCRIPTION	SYMBOL NUMBER	USED ON
	847880	Bracket Assembly, Electrical		
1	341681-910	Component Assy. (A-P)		
	31-119918-6206	Screw, Mach. Pan Hd.		
	1-216741-420	Lockwasher, Spring		
2	19-211473-102	Resistor, Vari		
3	16-211473-102	Resistor, Vari (A-P for 2 & 3)		
	1-120052-211	Lockwasher, Tooth Int.		
	25-106766-1	Nut, Hex		
4	241769	Spring		
	242186	Arm Assy., Sensing (A-P)		
	31-119923-6203	Screw, Set, Headless		
5	241771	Bushing (A-P)		
	31-119918-4003	Screw, Mach.		
	1-216741-411	Lockwasher, Spring		
6	242183	Pad, Sensing		
7	241770	Arm, Sensing		
8	104099-3	Terminal Strip (A-P)		
	31-119918-6206	Screw, Mach.		
	1-118195-305	Washer, Plain		
	1-216741-420	Lockwasher, Spring		
	31-119998-62	Nut, Hex		
9	129066	Rectifier, Silicon		
10	123108-22	Grommet		
11	341987	Bracket, Mtg. Diodes		
12	105960	Strip, Terminal (A-P)		
13	128020-507	Capacitor, Fixed		
14	129451	Relay, 28VDC (A-P)		
	1-216741-420	Lockwasher, Spring		
	31-119998-62	Nut, Hex		
15	747530	Bracket, Subassy.		

EXPLODED VIEW PARTS LIST
BRACKET ASSEMBLY, ELECTRICAL - 847880 (HORIZONTAL OSCILLOGRAPH)
FIGURE 7-18 (continued)

ITEM NUMBER	PART NUMBER	DESCRIPTION	SYMBOL NUMBER	USED ON
16	128041	Socket, Relay 14P (A-P)		
	31-119918-4006	Screw, Mach.		
	1-216741-411	Lockwasher, Spring		
	31-119918-4006	Screw, Mach.		
		-- -- -- -- -- * -- -- -- -- --		
17	330112	Transformer, Power (A-P)		
	1-216741-425	Lockwasher, Spring		
	31-119998-82	Nut, Hex		
	1-118195-307	Washer, Plain		
		-- -- -- -- -- * -- -- -- -- --		

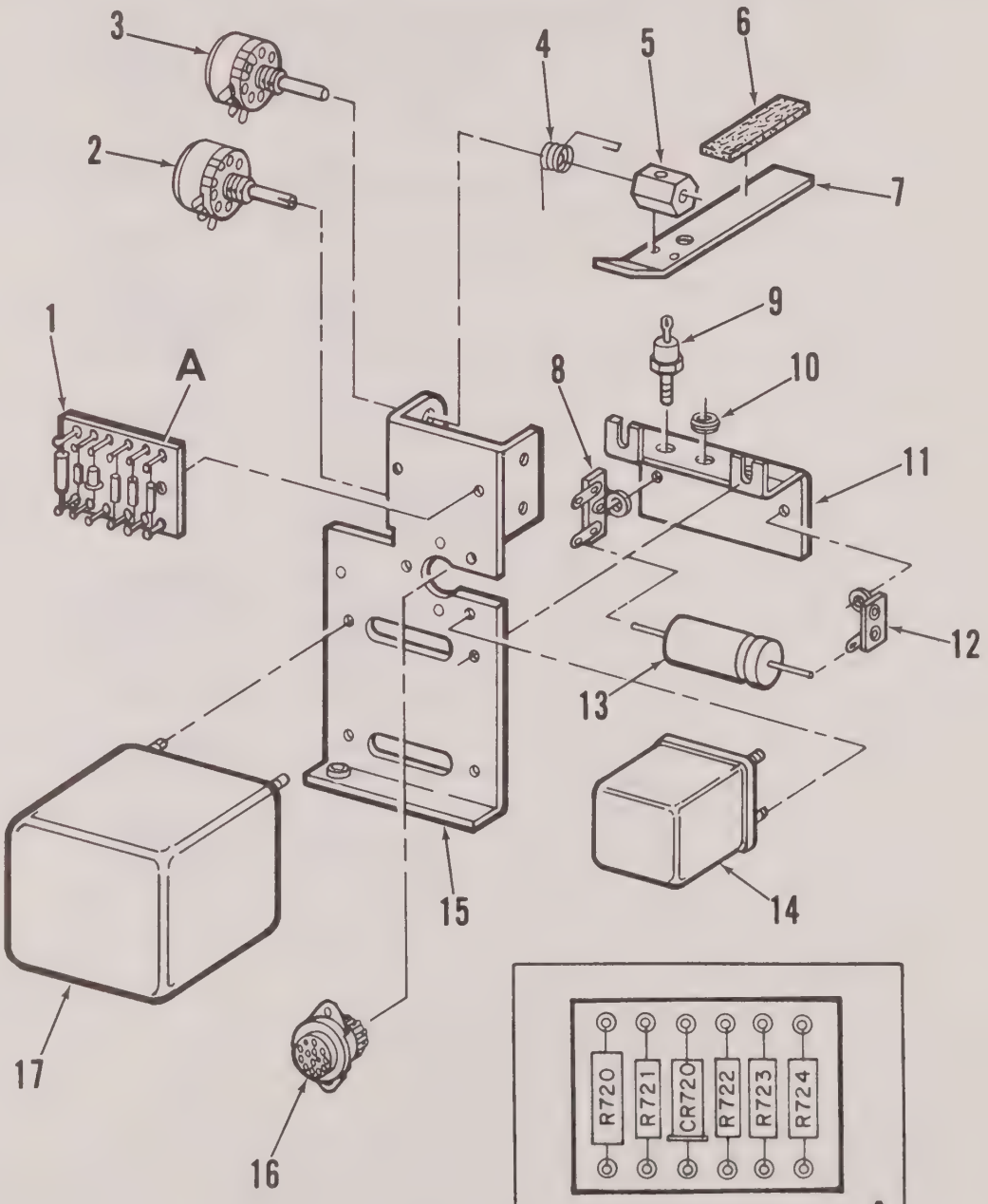

FIGURE 7-18 BRACKET ASSEMBLY, ELECTRICAL - 847880 (HORIZONTAL OSCILLOGRAPH)

EXPLODED VIEW PARTS LIST
SYSTEM POWER PANEL ASSEMBLY - MODEL 11-1603-12
FIGURE 7-19

ITEM NUMBER	PART NUMBER	DESCRIPTION	SYMBOL NUMBER	USED ON
	11-1603-12	System Power Panel Assembly		
1	1-284874-1	Switch, Pushbutton		
2	886935	Panel Assy., Power		
3	124804-3	Clamp, Cable		
		(A-P)		
	31-119918-6206	Screw		
	1-216741-420	Lockwasher, Spring		
		-- -- -- -- -- * -- -- -- -- --		
4	267069	Plate, Term. Bd. Mtg.		
		(A-P)		
	31-119918-6212	Screw		
	1-118195-305	Washer, Flat		
	1-216741-420	Lockwasher, Spring		
		-- -- -- -- -- * -- -- -- -- --		
5	267050-10	Term. Bd.		
	744079	Cable Assy.		
6	265840-2	Terminal Lug		
7	667067	Term. Board, Cover		
		(A-P)		
	31-119918-6220	Screw		
	1-216741-420	Lockwasher		
	1-118195-305	Washer, Flat		
		-- -- -- -- -- * -- -- -- -- --		
8	2410126-14	Terminal Lug		
		(A-P)		
	31-119918-6206	Screw		
	1-216741-420	Lockwasher, Spring		
		-- -- -- -- -- * -- -- -- -- --		
9	265840-1	Lug		
10	265840-2	Terminal Lug		

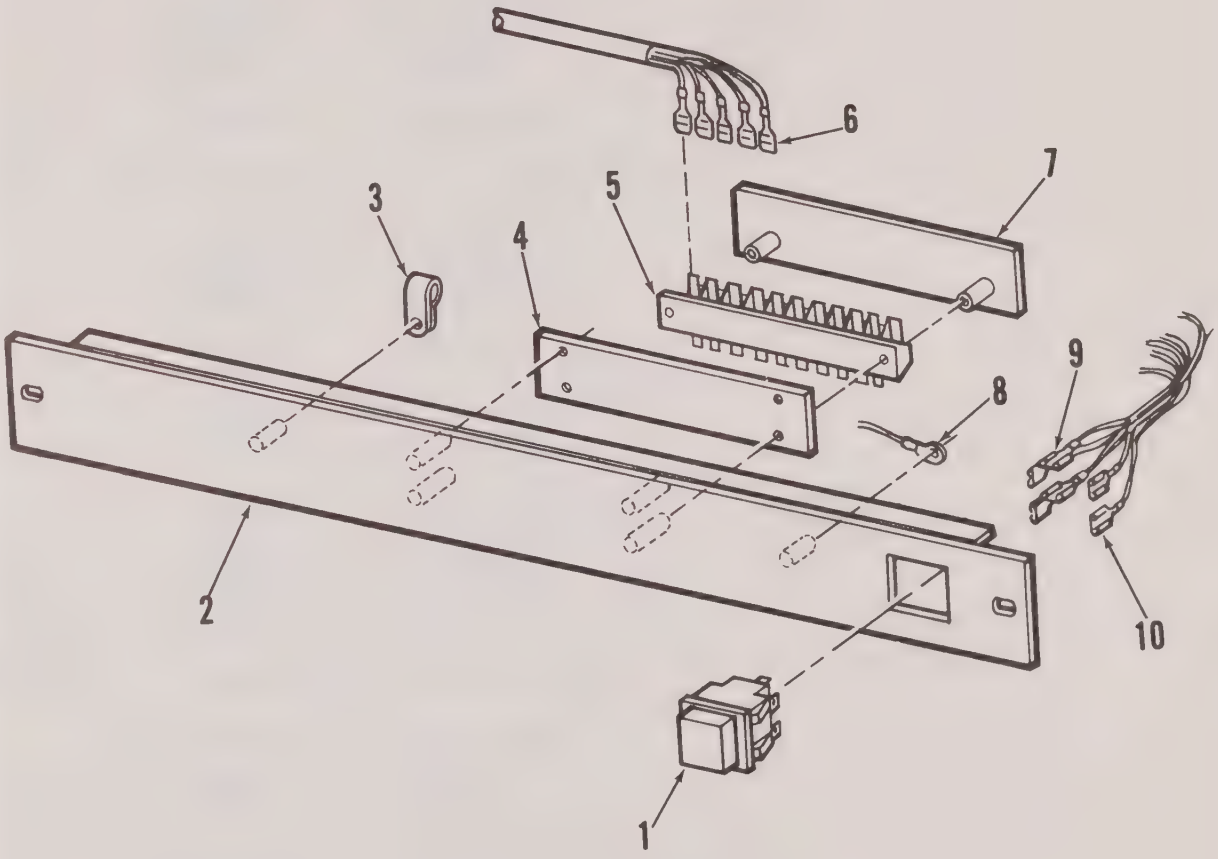

FIGURE 7-19 SYSTEM POWER PANEL ASSEMBLY - 11-1603-12

EXPLODED VIEW PARTS LIST
MAIN CONNECTOR PANEL & CABLE ASSEMBLY
MODEL 11-1601-11
FIGURE 7-20

ITEM NUMBER	PART NUMBER	DESCRIPTION	SYMBOL NUMBER	USED ON
	11-1601-11	Main Connector Panel and Cable Assembly		
1	121122	Connector, Recep. Female (A-P)		
	31-119918-4006	Screw, Pan Hd.		
	31-119998-40	Nut, Hex		
	1-216741-411	Lockwasher		
2	241819	Plate, Adapter (A-P)		
	31-119918-4004	Screw, Pan Head		
3	441821	Panel, Connector		
4	848135	Cable Assembly		
5	245449	Plate, Cover		
6	294153	Plate, Cover (A-P for items 5 & 6)		
	243898-40	Nut, with Washer		
	31-119918-4004	Screw, Pan Hd.		
7	116198-14	Fuse, Cartridge 5 Amp		
	113182-10	Fuse, Ceramic 10 Amp		
8	129758	Fuseholder		
9	241026-15	Lug, Terminal		
10	284866	Connector, Recep. Male		
11	441822-910	Plate Assy., Ident (A-P)		
	31-119918-2604	Screw, Pan Head		
12	894022	Shield Assy. (A-P)		
	31-119918-6208	Screw, Pan Head		
	31-119918-40	Nut, Hex		
13	894021	Bracket Assy. (A-P)		
	31-119918-6208	Screw, Pan Hd.		
14	265814-10	Terminal Board (A-P)		
	31-119918-6208	Screw, Pan Hd.		
	1-216741-420	Lockwasher, Spring		
	1-118195-305	Washer, Plain		
15	121048	Connector, Recep. Female (A-P)		
	31-119918-4006	Screw, Pan Hd.		
	31-119918-40	Nut, Hex		
	1-216741-411	Lockwasher, Spring		

EXPLODED VIEW PARTS LIST
MAIN CONNECTOR PANEL & CABLE ASSEMBLY
MODEL 11-1601-11
FIGURE 7-20 (continued)

ITEM NUMBER	PART NUMBER	DESCRIPTION	SYMBOL NUMBER	USED ON
16	241794-910	Bracket Assy. (A-P)		
	31-119918-8204	Screw, Pan Hd.		
		-- -- -- -- -- * -- -- -- -- --		
17	124804-2	Clamp, Cable (A-P)		
	31-119918-6206	Screw, Pan Hd.		
	31-119998-62	Nut, Hex		
	1-216741-420	Lockwasher, Spring		
	1-118195-305	Washer, Plain		
		-- -- -- -- -- * -- -- -- -- --		
18	121305	Connector, Recep. Female (A-P)		
	31-119918-4006	Screw, Pan Hd.		
	31-119998-40	Nut, Hex		
	1-216741-411	Lockwasher, Spring		
		-- -- -- -- -- * -- -- -- -- --		

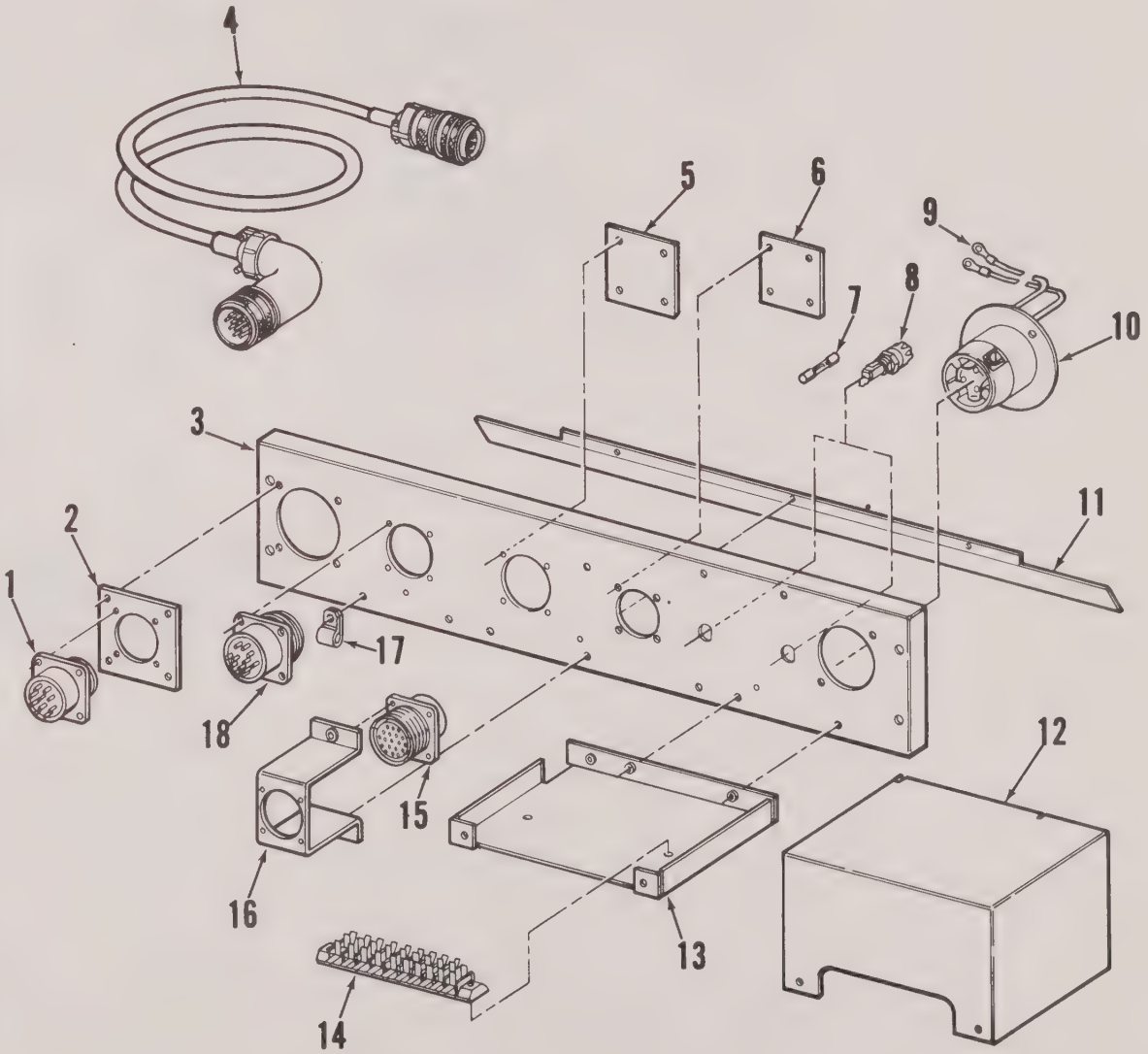

FIGURE 7-20 MAIN CONNECTOR PANEL & CABLE ASSEMBLY - 11-1601-11

EXPLODED VIEW PARTS LIST
PANEL ASSEMBLY PEN POSITION - 892693-X
FIGURE 7-21

ITEM NUMBER	PART NUMBER	DESCRIPTION	SYMBOL NUMBER	USED ON
	*892693-X	Panel Assembly, Pen Position		
1	892235	Panel		
	892450	Harness Assy., Panel (A-P)		
	1-293279-1	Nut, Plain Hex		
	292407-1	Adhesive, Liquid		
		-- -- -- -- -- * -- -- -- -- --		
2	0-270156-1	Connector		
3	270154-1	Contact		
4	232997-23	Strap, Retaining		
5	10-286044-103	Resistor, Variable		
6	693909	Plug, Button		
7	694245	Knob Assy., Locking		
8	285651-3	Knob		

892693-1 - used on 2222
892693-2 - used on 1222
892693-3 - used on 1122
892693-4 - used on 1111

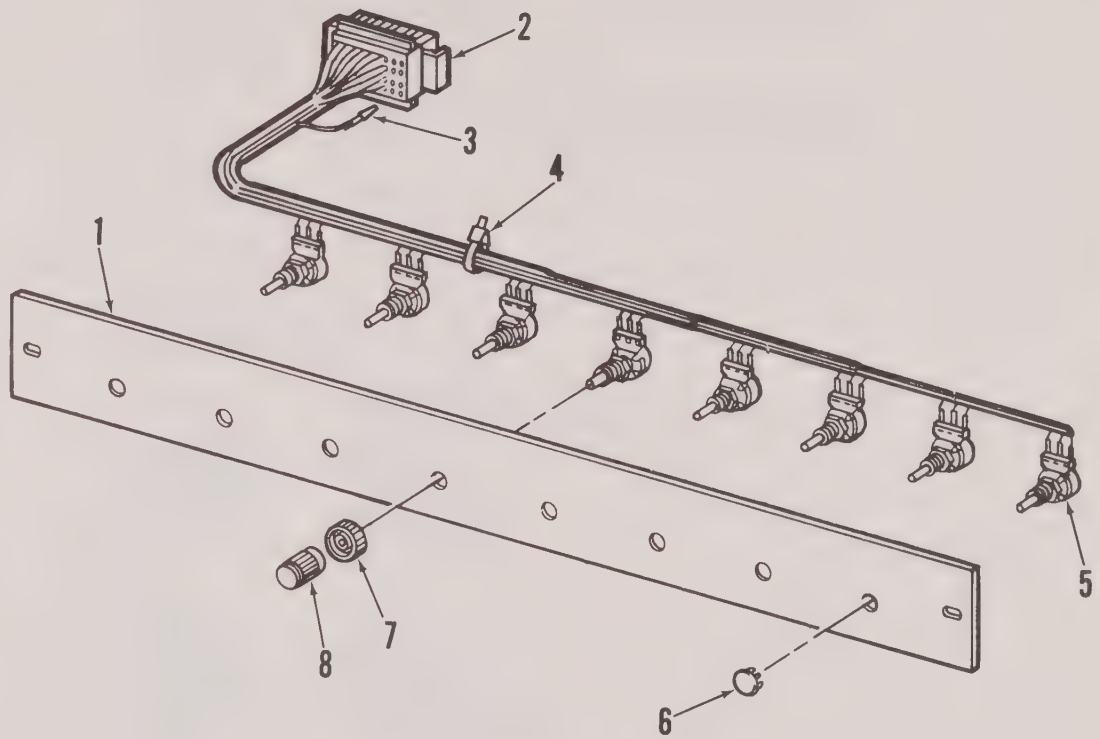

FIGURE 7-21 PANEL ASSEMBLY PEN POSITION - 892693-X

EXPLODED VIEW PARTS LIST
FRAME ASSEMBLY, DRIVE AMPLIFIER - 692454
FIGURE 7-22

ITEM NUMBER	PART NUMBER	DESCRIPTION	SYMBOL NUMBER	USED ON
	692454	Frame Assembly, Drive Amp		
1	892461	Front Panel Assy (for -2XX)		
2	265678	Spacer, Center		
		(A-P)		
	31-119920-0208	Screw		
		-- -- -- -- -- * -- -- -- -- --		
3	892455-1	Frame Subassy, Drive Amp (see Figure 7-23)		
		(A-P)		
	31-119920-0208	Screw		
		-- -- -- -- -- * -- -- -- -- --		
4	269569-1	Slide		
		(A-P)		
	31-119918-0206	Screw		
	31-119918-0204	Screw		
		-- -- -- -- -- * -- -- -- -- --		
5	269569-3	Mtg. Brkt.-Rear		
		(A-P)		
	31-119918-0208	Screw		
	1-118195-309	Washer		
	1-216741-430	Washer, Spring		
	245244-02	Nut Assy.		
		-- -- -- -- -- * -- -- -- -- --		
6	269569-4	Nut Bar		
7	269569-2	Mtg. Brkt., Front		
8	245244-02	Nut Assy.		
9	892647	Front Panel Assy.		
10	1-261111-10	Retainer, Screw		
11	269944	Spacer (used on -1XX)		
12	249961	Spacer (used on -2XX)		

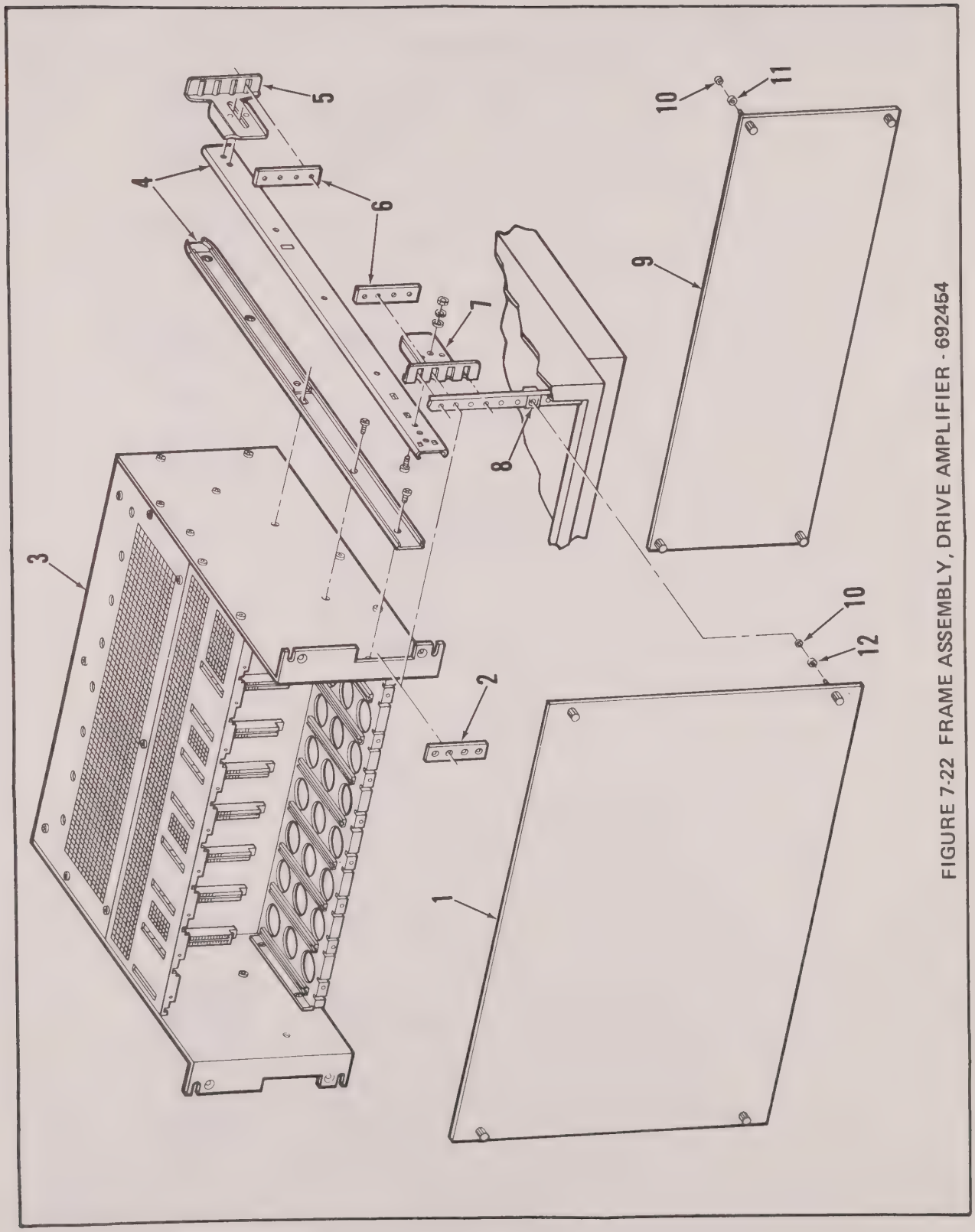

FIGURE 7-22 FRAME ASSEMBLY, DRIVE AMPLIFIER - 692454

EXPLODED VIEW PARTS LIST
FRAME SUBASSEMBLY, DRIVE AMPLIFIER - 892455
FIGURE 7-23

ITEM NUMBER	PART NUMBER	DESCRIPTION	SYMBOL NUMBER	USED ON
	*892455-X	Frame Subassy., Drive Amp.		
1	891918	Chassis Asys.		
2	245244-02	Nut Assy.		
3	286026	Transformer (A-P)		
	31-119918-0208	Screw		
	1-216741-430	Washer, Spring		
		-- -- -- -- -- * -- -- -- -- --		
4	265814-15	Strip, Barrier (A-P)		
	31-119918-6208	Screw		
	243898-62	Nut Assy.		
		-- -- -- -- -- * -- -- -- -- --		
5	892230	Panel Assy. (A-P)		
	31-119918-6206	Screw		
	1-216741-420	Washer, Spring		
		-- -- -- -- -- * -- -- -- -- --		
	892545	Cover, Panel Assy. (used on -2)		
6	892307	Cover, Panel Assy. (used on -1) (A-P)		
		Screw		
		Washer, Spring		
		-- -- -- -- -- * -- -- -- -- --		
7	267050-12	Strip, Barrier (A-P)		
	31-119918-6208	Screw		
	243898-62	Nut Assy.		
		-- -- -- -- -- * -- -- -- -- --		
	791966	Cable Assy.		
8	9-270159-9	Connector		
9	270154-1	Contact		
10	265840-1	Contact		
	692442	Cable Assy.		
11	291067	Cord Set		
12	265840-1	Lug		
	692441	Connector Assy. (A-P)		
	31-119918-4008	Screw		
	1-118195-304	Washer		
	1-216741-415	Washer, Spring		
	31-119998-40	Nut		
		-- -- -- -- -- * -- -- -- -- --		
13	281584	Connector, A.C.		
14	265840-2	Lug		
15	241026-3	Lug		

*892455-1 w/o zero panel
892455-2 w/zero panel

EXPLODED VIEW PARTS LIST
FRAME SUBASSEMBLY, DRIVE AMPLIFIER - 892455
FIGURE 7-23 (continued)

ITEM NUMBER	PART NUMBER	DESCRIPTION	SYMBOL NUMBER	USED ON
16	286024	Transformer (A-P)		
	243898-62	Nut Assy.		
	31-119918-6207	Screw		
		-- -- -- -- -- * -- -- -- -- --		
17	1-265849-11	Bracket, Angle (A-P)		
	31-119918-6207	Screw		
	1-216741-430	Washer, Spring		
		-- -- -- -- -- * -- -- -- -- --		
18	891909	Bracket Assy. (A-P)		
	31-119920-8205	Screw		
		-- -- -- -- -- * -- -- -- -- --		
	892453	Connector Assy.		
19	1-283408-2	Contact, Elect.		
20	1-283408-1	Contact, Elect.		
21	270154-1	Contact		
22	9-270159-9	Connector		
23	0-270156-1	Connector		
24	265840-1	Terminal Lug		
25	241026-3	Lug		
26	9-270158-9	Connector		
27	270153-1	Contact, Elect.		
28	283470-44	Connector (A-P)		
	13-262716-4008	Screw		
		-- -- -- -- -- * -- -- -- -- --		
29	284700	Key, Polarizing		
30	692320	Resistor Assy.		
31	286598	Commoning Spring		
32	0-270155-1	Connector		

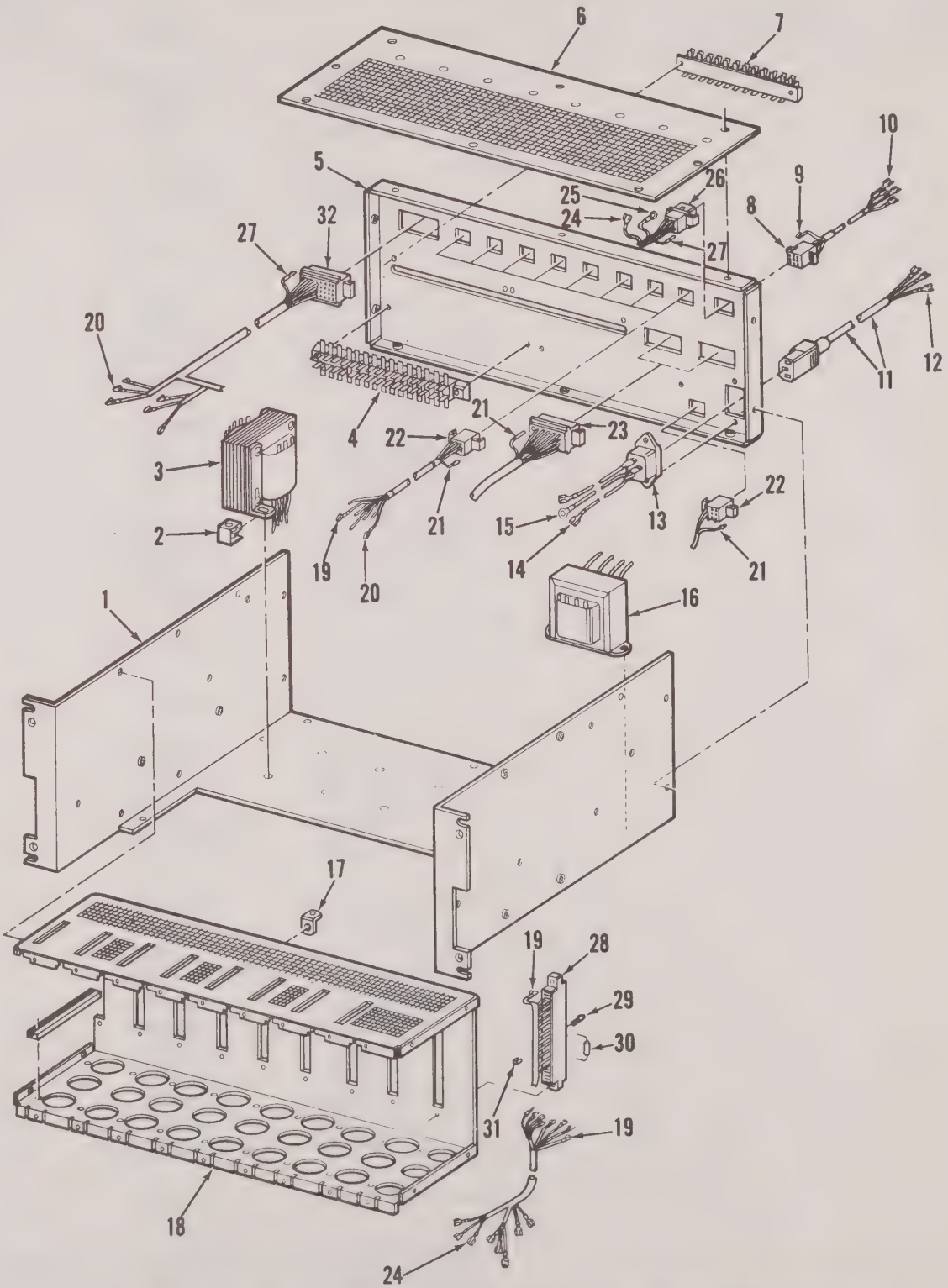

FIGURE 7-23 FRAME SUBASSEMBLY, DRIVE AMPLIFIER - 892455

EXPLODED VIEW PARTS LIST
INK SUPPLY ASSEMBLY 849432 (HORIZONTAL OSCILLOGRAPH)
848137 (VERTICAL OSCILLOGRAPH)

FIGURE 7-24

ITEM NUMBER	PART NUMBER	DESCRIPTION	SYMBOL NUMBER	USED ON
	849432 & 848137	Ink Supply Assembly		
1	866010	Motor Assy, Ink Pump		
2	243937	Plate, Mtg. (A-P)		
	1-216741-425	Lockwasher		
	31-119918-8206	Screw		
		-- -- -- -- -- * -- -- -- -- --		
	644081	Plate Assy., Mtg. (A-P)		
	31-119920-0206	Screw, Mach.		
	230854	Adhesive, Liquid		
	1-216741-420	Lockwasher, Spring		
	31-119998-62	Nut, Hex		
		-- -- -- -- -- * -- -- -- -- --		
3	243936	Plate, Mtg.		
4	240161-424	Pin, Straight		
5	243938	Guide, Gear Pack		
6	9-227070-3	Ring, Retaining		
7	232250-7	Bearing, Retainer		
8	247807	Pointer		
9	247808	Guide, Pointer (A-P)		
	1-118195-305	Washer, Plain		
		-- -- -- -- -- * -- -- -- -- --		
10	243826	Gear, Spur		
11	4-112468-19	Pin, Roll		
12	644223	Cylinder Assy., Ink		
13	243828	Gear, Rack		
14	14-119923-6202	Set Screw		
15	243821	Piston		
16	243857	Diaphragm, Valve		
17	243827	Cap, Piston		
18	240707-8204	Screw, Assembled Washer		
	749433 or 748136	Chamber Assy., Ink		
19	244220	Spring, Retaining		
20	444213	Chamber, Ink		
21	244109	Valve		
22	344593	Insert		
23	232780-7	Packing, Preformed		
24	244592	Screw, Cap		
25	31-119923-6203	Screw, Set		
26	243939	Stud, Continuous		

*Chamber Assy. 749433 part of Ink Supply 849432.
Chamber Assy. 748136 part of Ink Supply 848137.

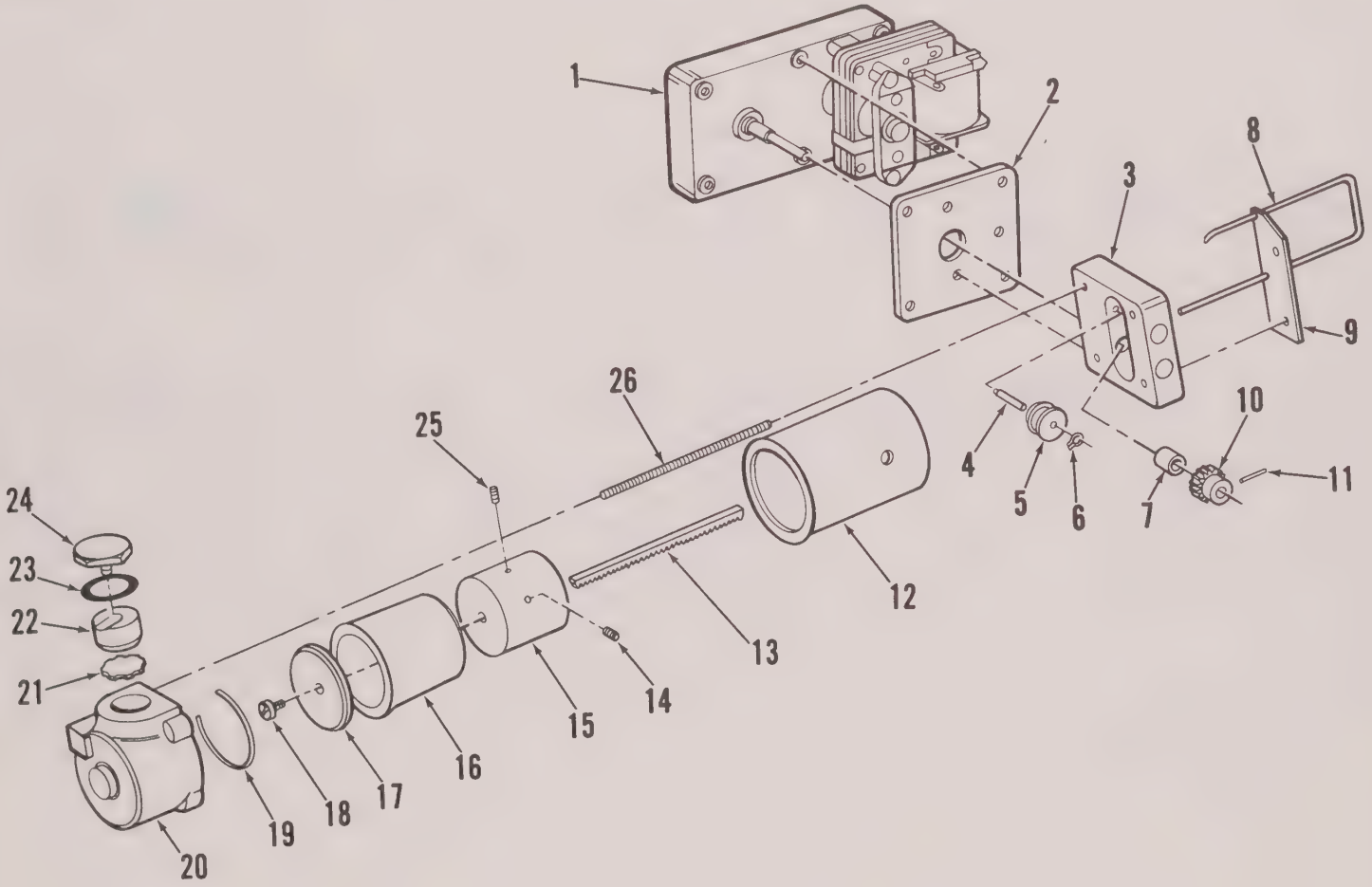

FIGURE 7-24 INK SUPPLY ASSEMBLY 849432 & 848137

EXPLODED VIEW PARTS LIST
TIMER ASSEMBLY, INTERNAL, MULTI-CHOICE
FIGURE 7-25

ITEM NUMBER	PART NUMBER	DESCRIPTION	SYMBOL NUMBER	USED ON
	848862	Timer Assembly, Int. Multi-Choice		
1	265840-1	Terminal Lug, Recep.		
2	248465	Motor, Sync.		
		(A-P)		
	31-119914-5002	Screw, Mach. Pan Hd.		
		-- -- -- -- -- * -- -- -- -- --		
3	647863	Bracket Assy.		
4	127667	Actuator, Switch		
	646178	Filter Assy., with Lugs		
5	5-115557-101	Resistor		
6	10-241145-204	Capacitor		
7	103097-7	Lug		
8	245959	Switch		
		(A-P)		
	1-216741-411	Lockwasher, Spring		
	31-119918-4020	Screw, Mach. Pan Hd.		
		-- -- -- -- -- * -- -- -- -- --		
9	127524	Spacer		
10	647870	Gear Assy.		
11	247876	Support, Pinion		
		(A-P)		
	1-118195-305	Washer, Plain		
	1-216741-420	Lockwasher, Spring		
	31-119918-6204	Screw, Mach. Pan Hd.		
		-- -- -- -- -- * -- -- -- -- --		
12	127711-1	Bearing, Sleeve		
13	648441	Cam Assy., Selector		
		(A-P)		
	31-119914-2602	Screw, Mach. Pan Hd.		
		-- -- -- -- -- * -- -- -- -- --		
14	247873	Cam, 10 second		
		(A-P)		
	21-119916-0002	Screw, Mach. Fl. Hd.		
		-- -- -- -- -- * -- -- -- -- --		
15	647874	Gear Assy.		
16	647867	Cam Assy.		
		(A-P)		
	14-121166-4002	Screw, Set, Headless		
		-- -- -- -- -- * -- -- -- -- --		
17	247864	Gear, Spur		
		(A-P)		
	14-121166-4002	Screw, Set, Headless		
		-- -- -- -- -- * -- -- -- -- --		
	648776	Cable Assy.		
18	103097-6	Lug		
19	265840-1	Terminal Lug, Recep.		
20	347877	Cover		
		(A-P)		
	31-119918-6203	Screw, Mach. Pan Hd.		
	1-216741-420	Lockwasher, Spring		
		-- -- -- -- -- * -- -- -- -- --		
21	123108-41	Grommet		

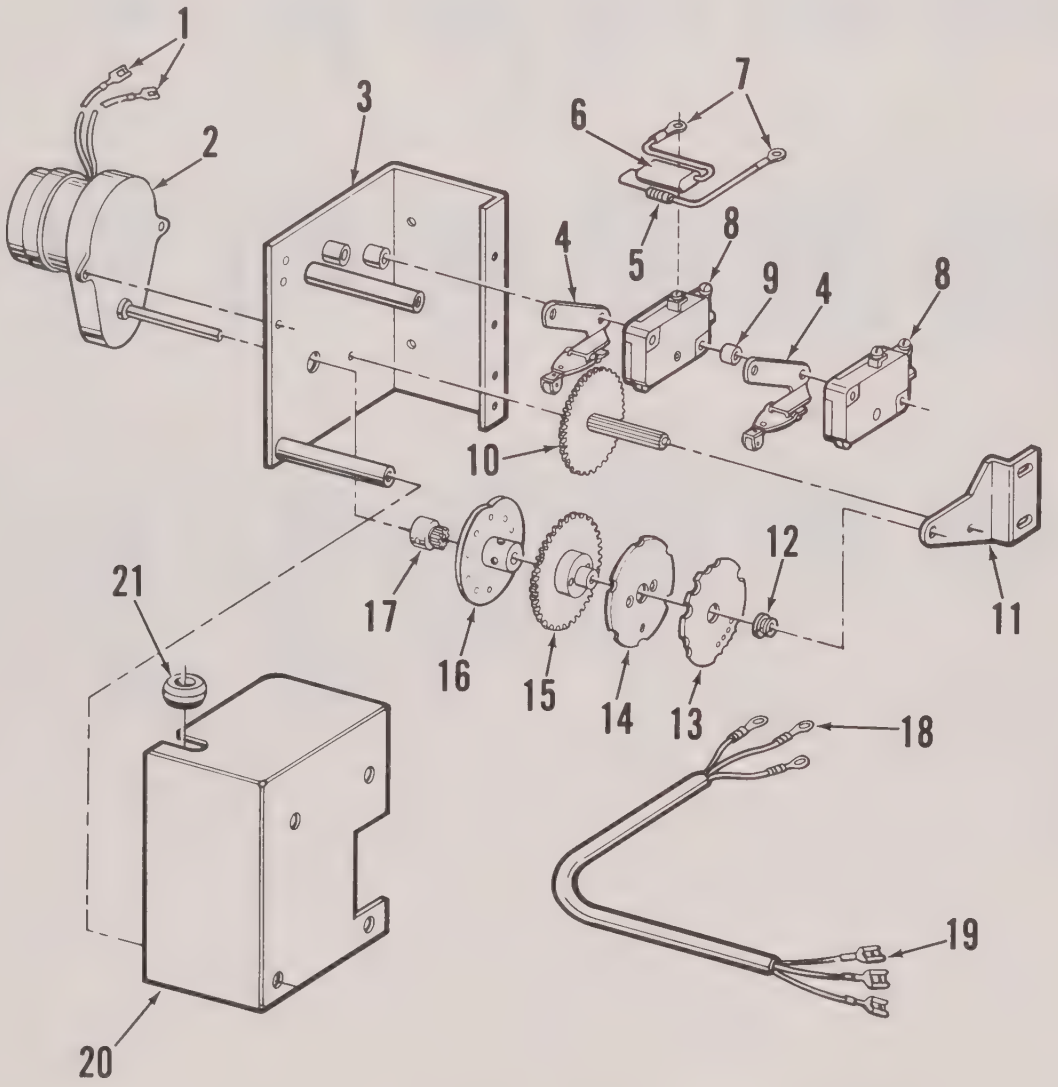

FIGURE 7-25 TIMER ASSEMBLY, INTERNAL, MULTI-CHOICE

ELECTRICAL PARTS LIST
DRIVE AMPLIFIER BOARD ASSEMBLY - 886220
FIGURE 7-26

SYMBOL NUMBER	PART NUMBER	DESCRIPTION
C201	10-125904-223	Capacitor
C202	10-247116-102	Capacitor
C203, 204	10-247116-103	Capacitor
C205	240352-501	Capacitor
C206	10-247116-103	Capacitor
C207	240352-501	Capacitor
C208	262585-106	Capacitor
C209	10-247116-103	Capacitor
C210, 211	10-247116-102	Capacitor
C212	240352-202	Capacitor
C213	20-125904-503	Capacitor
C214	10-125904-223	Capacitor
C215	281509-507	Capacitor
C216	262585-106	Capacitor
C217	281509-507	Capacitor
C218	262585-106	Capacitor
C219-222	286010-108	Capacitor
C223	288755-104	Capacitor (Used only in 80mm applications.)
CR201, 202	263727	Diode, IN961B
CR203-208	270508	Diode, 1N4454
CR209, 210	286018-1	Diode, MDA-101
CR211	269256-7	Diode, 1N4007
CR212	270508	Diode, 1N4454
Q201	281703-2	Transistor, 2N4403
Q202	281702-2	Transistor, 2N4401
Q203-205	286141	Transistor, 2N3904
Q206	1-230057-3	Transistor, 2N4923
Q207	1-281145-1	Transistor, 2N5982 (A-P)
	12-119918-4006	Screw
		-----*-----
Q208	1-230058-3	Transistor, 2N4920
Q209	1-286147-1	Transistor, 2N5985 (A-P)
	12-119918-4006	Screw
		-----*-----
Q210	281857-2	Transistor, 2N5033
R201	1-281851-30002	Resistor
R202	1-281851-1002	Resistor
R203	1-281851-43201	Resistor
R204	1-281851-10002	Resistor

ELECTRICAL PARTS LIST
DRIVE AMPLIFIER BOARD ASSEMBLY - 886220
FIGURE 7-26 (continued)

SYMBOL NUMBER	PART NUMBER	DESCRIPTION
R205	282299-103	Resistor
R206, 207	1-281851-69000	Resistor
R208	282299-103	Resistor
R209	282299-202	Resistor
R210	1-281851-200R0	Resistor
R211	1-281851-10002	Resistor
R212, 213	1-281851-10001	Resistor
R214	1-281851-16601	Resistor
R215, 216	1-281851-10000	Resistor
R217, 218	1-281851-80000	Resistor
R219	1-281851-72001	Resistor
R220	1-281851-40000	Resistor
R221	1-281851-80001	Resistor
R222	1-281851-40001	Resistor
R223, 224	5-241111-622	Resistor
R225	5-241111-392	Resistor
R226, 227	1-281851-50001	Resistor
R228	1-281851-10002	Resistor
R229	1-281851-60001	Resistor
R230	1-281851-60000	Resistor
R231	282299-502	Resistor
R232	1-281851-500R0	Resistor
R233	1-281851-10003	Resistor
R234	1-281851-26501	Resistor
R235	5-241111-104	Resistor
R236	5-241111-203	Resistor
R237	5-241111-822	Resistor
R238	5-241111-102	Resistor
R239, 240	5-241111-202	Resistor
R241	5-241111-391	Resistor
R242	5-241111-102	Resistor
R243	5-286587-181	Resistor
R244	5-283654-220	Resistor
R245	5-286587-181	Resistor
R246	5-241111-102	Resistor
R247	1-281851-20001	Resistor
R248	1-281851-500R0	Resistor
R249, 250	1-281851-80000	Resistor
R251	5-241111-104	Resistor
R252, 253	5-241111-103	Resistor

ELECTRICAL PARTS LIST
DRIVE AMPLIFIER BOARD ASSEMBLY - 886220
FIGURE 7-26 (continued)

SYMBOL NUMBER	PART NUMBER	DESCRIPTION
R254	1-281851-16001	Resistor
R255	1-281851-50000	Resistor
R256	5-241111-101	Resistor
R257	1-281851-20001	Resistor
R258	Not Used	
R259	1-281851-40001	Resistor
R260	282299-103	Resistor
R261	Not Used	
R262	5-241111-104	Resistor
R263, 264	5-130340-2R0	Resistor
R265	5-241111-822	Resistor
U201-204	280863-3	Integrated Circuit, 741C
U205	269941-2	Integrated Circuit, 1439P1
U206	280863-3	Integrated Circuit, 741C
U207	285461	Voltage Reg., MC7815 (A-P)
	12-119918-4005	Screw
		-----*-----
U208	285778	Voltage Reg., MC7915 (A-P)
	12-119918-4005	Screw
		-----*-----
U209, 210	Not Used	
U211	285589	Isolator, LED, 4N28
HS	686391	Heatsink (A-P)
	31-119918-4005	Screw
	1-118195-304	Washer
	1-216741-411	Lockwasher
		-----*-----
---	685187	Jack Assembly
J201	285315	Jack
J202	289045	Jack (A-P)
	1-120052-211	Lockwasher
		-----*-----
E1 thru E4	265763-3	Contact

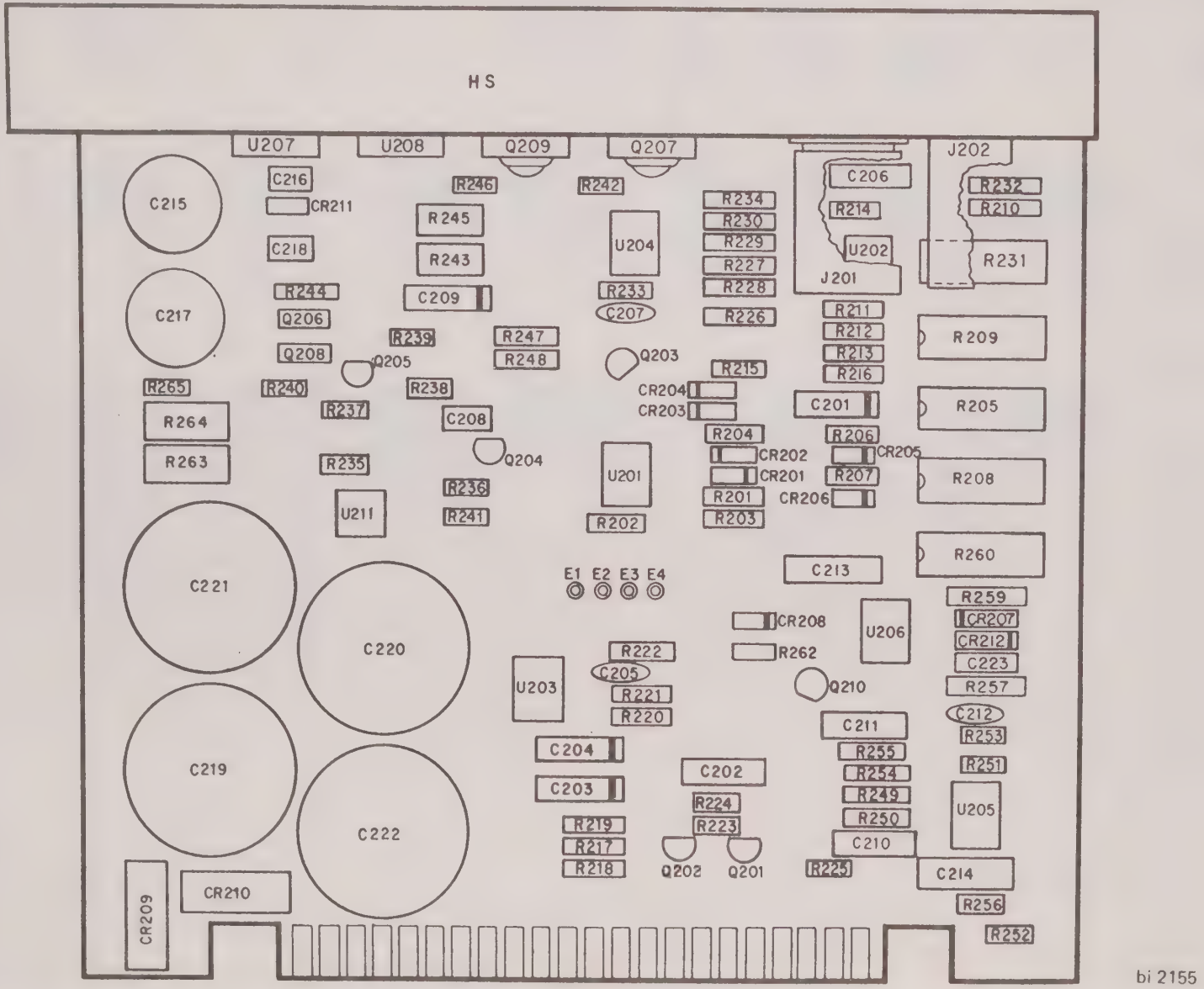

FIGURE 7-26 DRIVE AMPLIFIER BOARD - 886220

ELECTRICAL PARTS LIST
CONTROL TIMER BOARD - 886327
FIGURE 7-27

SYMBOL NUMBER	PART NUMBER	DESCRIPTION
C101, 102	243037-507	Capacitor
C103	262585-106	Capacitor
C104	240352-102	Capacitor
C105	262585-475	Capacitor
C106	230098-104	Capacitor
CR101	286018-2	Diode, MDA104
CR102, 103	286018-1	Diode, MDA101
CR104	Not Used	
CR105, 106	269256-7	Diode, 1N4007
CR123	280440	Diode, 1N4148
Jumper	267235	Jumper Circuit
K101	289048-24	Relay
Q101,102,104	292538-2	Transistor, 2N6427
R101, 102	5-241111-302	Resistor
R103	5-241111-242	Resistor
R104, 105	5-241111-103	Resistor
R106	5-241111-271	Resistor
R107	5-241111-103	Resistor
R108	5-241111-302	Resistor
R109	5-241111-104	Resistor
S103	268923	Switch (A-P)
	285179	Switchplate
	31-119918-4004	Screw
	1-118195-304	Washer, Plain
	1-216741-411	Lockwasher
		-----*-----
S104	286142-8	Switch
U101	285317	Voltage Regulator, MC7805CP (A-P)
	31-119918-4004	Screw
		-----*-----
U102 thru U105	270622	Integrated Circuit, 7493
U106	286016	Integrated Circuit, SN74121
U107	285589	Isolator, LED, 4N28
HS	686397	Heatsink (A-P)
	31-119918-4004	Screw
	1-118195-304	Washer, Plain
	1-216741-411	Lockwasher
		-----*-----
FC	285577	Fuse Clip

NOTE: See Table 7-1, Fuse Table, for fuse ratings.

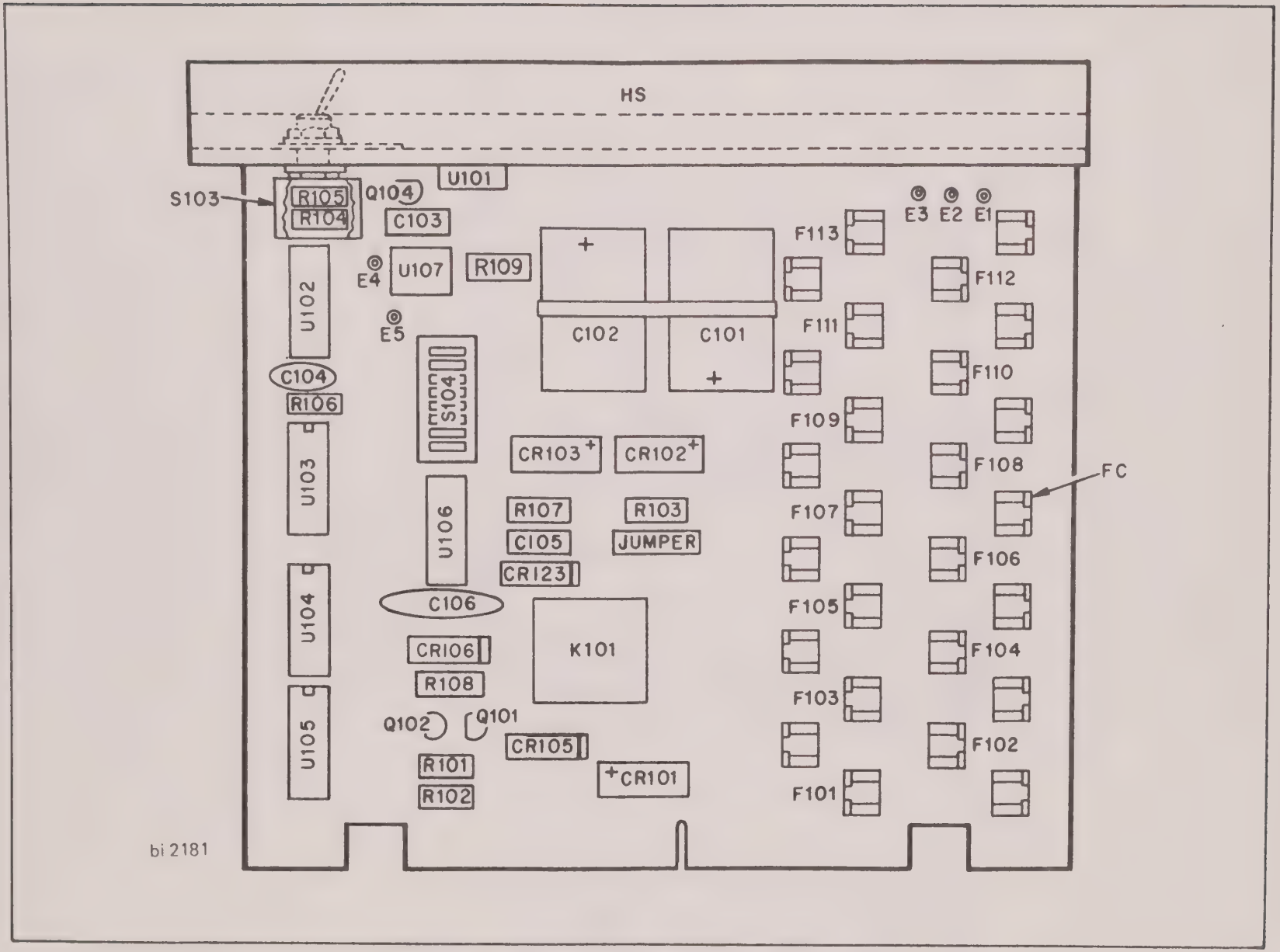

FIGURE 7-27 CONTROL TIMER BOARD - 886327

TABLE 7-1 FUSE TABLE - CONTROL TIMER BOARD 886327

FUSE SYMBOL	LINE VOLTAGE & FREQUENCY			
	115V/60HZ	115V/50HZ	115V/400HZ	230V/50HZ
F101 thru F108	116198-9 3/4A, 125V	116198-10 1A, 125V	116198-9 3/4A, 125V	266924-7 1/2A, 250V
F109	116198-6 1/4A, 125V	116198-7 3/8A, 125V	116198-6 1/4A, 125V	266924-2 1/4A, 250V
F110	116198-6 1/4A, 125V	116198-6 1/4A, 125V	116198-6 1/4A, 125V	266924-4 1/8A, 250V
F111	116198-6 1/4A, 125V	116198-6 1/4A, 125V	116198-6 1/4A, 125V	266924-4 1/8A, 250V
F112	116198-11 1.5A, 125V	116198-11 1.5A, 125V	116198-36 7A, 125V	266924-6 3/4A, 250V
F113	116198-13 3A, 125V	116198-13 3A, 125V	116198-13 3A, 125V	266924-1 1.5A, 250V

NOTE: All fuses located on Control Timer Board Assembly (886327).

EXPLODED VIEW PARTS LIST
HORIZONTAL RACK MOUNT - 448569
FIGURE 7-28

ITEM NUMBER	PART NUMBER	DESCRIPTION	SYMBOL NUMBER	USED ON
	448569	Installation, Oscillograph		
1	0000-2607-61	Oscillograph Assembly, MK200, Horizontal (A-P)		
	31-119918-8208	Screw, Mach.		
	1-118195-307	Washer, Plain		
	1-216741-425	Lockwasher, Spring		
		-- -- -- -- -- * -- -- -- -- --		
2	347430-1	Trim Panel		
3	247433	Spacer, Top		
	249077	Spacer, Top (for Lowboy use) (A-P)		
	31-119920-8208	Screw, Mach.		
		-- -- -- -- -- * -- -- -- -- --		
4	247436	Spacer, Bottom		
	249076	Spacer, Bottom (for Lowboy use) (A-P)		
	31-119920-8208	Screw, Mach.		
5	347448	Nut, Strip		
	349078	Nut, Strip (for Lowboy use)		
6	268590	Nut, Plate (A-P)		
	31-119918-0210	Screw, Mach.		
	230859	Adhesive		
	1-216741-480	Lockwasher		
	1-118195-300	Washer		
		-- -- -- -- -- * -- -- -- -- --		
7	344757	Bracket, Slide L.H.		
8	247496	Clamp, Outer Tube (A-P)		
	31-119918-6206	Screw, Mach.		
	1-216741-420	Lockwasher, Spring		
		-- -- -- -- -- * -- -- -- -- --		
9	247495	Tube, Outer		
10	247503	Tube, Inner Locking		
11	247510	Rod, Push		
12	448371-2	Slide, Rack Set (A-P)		
	31-119920-8206	Screw, Mach. Fl. Hd.		
		-- -- -- -- -- * -- -- -- -- --		
13	447723	Bracket, Slide R.H.		
14	447722	Bracket, Slide L.H.		
15	344759	Bracket, Slide R.H.		

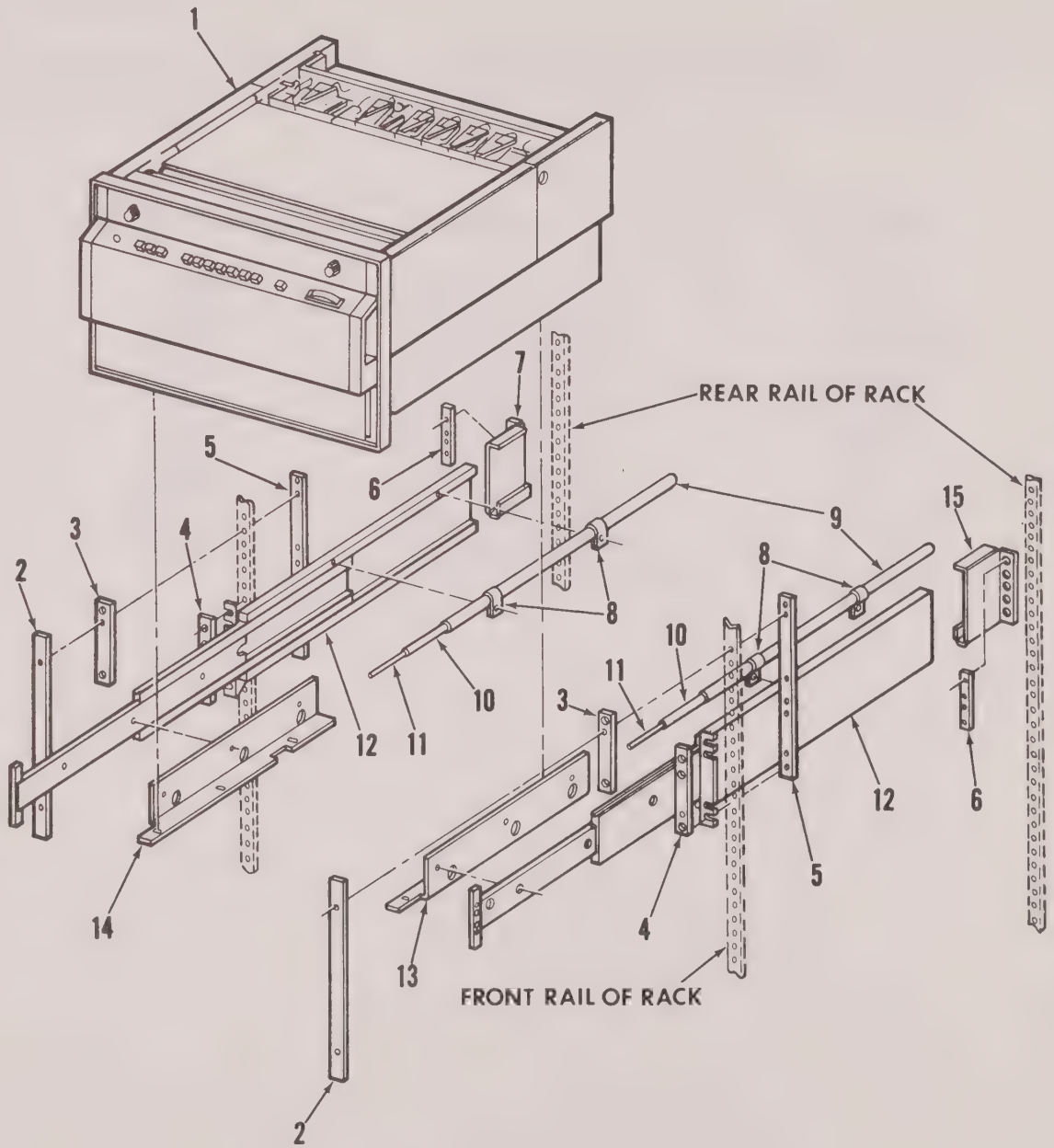

FIGURE 7-28 HORIZONTAL RACK MOUNT

SECTION VIII

SCHEMATICS, WIRING DIAGRAMS AND INSTALLATION DRAWINGS

8.1 GENERAL

This section contains schematics and wiring diagrams for the components covered in this manual. In addition, the installation drawing covering the Seven Interchannel Event Marker is included.

DRAWING NUMBER	COMPONENT	MODEL OR PART NUMBER
448080	Main Connector Panel	11-1601-11
444120	Power Panel Assembly	11-1603-12
292781	Horizontal Oscillograph	0000-2607-61
292585	Vertical Oscillograph	0000-2607-71
292560	Drive Amplifier Frame	692454-X
292273	Drive Amplifier Board	886220
292274	Control Timer Board	886327
262388	Seven Interchannel Event Marker Wiring Diagram	11-2221-02
692792	Seven Interchannel Event Marker Installation Drawing	11-2221-02

REVISIONS		
SYM	DESCRIPTION	DATE
00-Z	PHOTO-REPRODUCTION PER J-JOINT NO CHANGE	
A-1 A-2	F-3 WAS NO. F1, 5A 3AG SLOW-BLOW CB-2, 10A, CB-3 WAS: F2, 10A-3AG, F-3 DCN 16940	5-29-68
A-3	... THE UNIT WAS PT NO. 237532 A NO 232288-910 & NOW CONNECTORS CB-3 WAS: F-3 CB-1 WAS: CB-3 DCN 18089	10-3-73
B-1	DELETED CB-2 (10A) DCN 18102	
B-2	REV SYMBOL CB-1 / CB-3 FROM FUSE TO: CIRCUIT BREAKER DCN 18089	12-7-73
B-3	ADDED 11-1603-12 POWER PANEL TOWER	3-12-79
C-1	REPLACED CCT BREAKERS WITH FUSES DRAILER	6-27-79

POWER PANEL
MODEL NO 11-1603-10/-12
SCHEMATIC 444120

NEMA L5-15P
BRUSH PT #284866
(MATE - CABLE AND PLUG
BRUSH PT #684982

AN 3102A 20 27S (14 PIN FEMALE)
BRUSH PT #121305
(MATE AN 3106A 20-27P
BRUSH PT #124799)

AN 3102A-18-1S (10 PIN FEMALE)
BRUSH PT #121122
(MATE - AN 3106A-18-1P
BRUSH PT #122104)

TB-1

CONNECTS TO POWER PANEL

WHT, GRAY, YEL, RED, GRN, GND, NEUT, HOT

F-2 5A

F-1 10A

J-1 POWER INPUT

CABINET FRAME

LINE POWER FOR PREAMP POWER SUPPLY AND DRIVE FRAME

RELAY POWER (ON CHART RUN)

28V NEUT

+28V

WHT-BLK #22 AWG

WHT-BRN-RED #22 AWG

J-4 REMOTE CHART CONTROL

1	WHT RED YEL	A DIV BY 2
2	WHT-BLK GRN	B DIV BY 4
3	WHT BLK RED	C DIV BY 10
4	WHT BLK ORN	D DIV BY 100
5	WHT RED BLUE	E 28 V (ON REMOTE) TO REMOTE SW EXT RUN
6	WHT BRN ORN	F
7	WHT BLK	G 28 V NEUTRAL
8	WHT BLK	H MOTOR IND.
	WHT BRN RED	
	WHT-BRN-RED	
		I, J, K, L, M, N — N.C

J-5 EVENT MARKER

1	WHT-BRN-YEL	A L.H MARKER EXT INPUT
6	BLUE	B L.H MARKER NEUT
5	BRN	C L.H MARKER EXT INPUT
3	WHT-BRN-GRN	D L.H MARKER NEUT
4	YEL	E R.H MARKER EXT INPUT
7	WHT-GRAY	F R.H MARKER NEUT
2	WHT-BLK-YEL	G R.H MARKER EXT INPUT
8	BLK	N R.H MARKER NEUT
2	WHT-BRN-RED	J +28V. HOT (CHART MOVING)
1	WHT-BLK	J 28V. NEUT

J-701-A
AN 3102A-22-14S (19 PIN FEMALE)
BRUSH PT #121048

6	BLK	F R.H EVENT NEUT
7	WHT-GRAY	G R.H EVENT NEUT
3	GRN	J CHASSIS
5 8	WHT-BRN-RED	M MOTOR RELAY (+28 V ON CHART RUN)
4 7	WHT-BLK	E 28 V. NEUTRAL
6	WHT-BRN-ORN	S EXT. RUN (JUMPER TO "R")
5	WHT-RED-BLUE	R +28 V. ON REMOTE
2	GRAY	C 115 V.A.C HOT IN
1	WHT	D 115 V.A.C NEUT IN
4	WHT BLK ORN	K DIV BY 100 RELAY
3	WHT BLK RED	U DIV BY 10 RELAY
2	WHT BLK GRN	N DIV BY 4 RELAY
1	WHT RED YEL	B DIV BY 2 RELAY
3	WHT-BRN-GRN	T L.H EVENT NEUT
2	WHT-BLK-YEL	A R.H EVENT MARKER EXT IN
1	WHT-BRN-YEL	L L.H EVENT MARKER EXT IN
4	YEL	P R.H EVENT MARKER IN
5	ORN	V L.H EVENT MARKER IN
6	BLUE	H L.H EVENT NEUT

CONNECTOR TO OSCILLOGRAPH

EXCEPT AS NOTED,
WITHIN THIS ASSEMBLY #14 AWG IS USED FOR ALL WIRING TO AND FROM TB-1 AND J-1 ALL OTHER INTERNAL WIRING IS #22 AWG

NOTE
WHEN EVENT MARKER KIT (INTERCHANNEL) IS SUPPLIED OR ADDED J-5 IS INTERNALLY MOUNTED AND J-5 A REPLACES J-5 ON PANEL GIVING ACCESS TO ALL TERMINALS SEE SCHEMATIC OF KIT FOR TERMINAL DATA
ON 37 PIN J-5-A (BRUSH PART #241966)
MATE IS AN 3106A 28 21P BRUSH PART #241965

AN 3108B 22-14P
BRUSH PART #121051

BRUSH PART # 448125
P-701 EXTENSION

AN 3106A 22 14S
BRUSH PART #122109

P-701A

P-701

ANGLE CONNECTOR

SHIELDS CONNECTED TO PIN J AT P-701A END ONLY

PLUGS INTO OSCILLOGRAPH J-701

ALL 19 WIRES EXTENDED WITH SHIELDED PAIR, BRUSH PART #232434, FOR A-F, L-N, P-S, and V-T PINS

REQD	ITEM	PART NUMBER	DESCRIPTION	REMARKS	CML

LIST OF MATERIAL

UNLESS OTHERWISE SPECIFIED
DIMENSIONS ARE IN INCHES AND INCLUDE PLATING
XXX = ± .005 SURFACE FINISH
XX = ± .015
X = ± .08 ANGLES = ± 0° 30'

MATL

FIRST USE

	BY	DATE
DR	DT/CL	8-4-64
CH		
APP	R. LAMBRANO	8-21-69

ADD PIN

NAME DIAGRAM, WIRING
MAIN CONNECTOR PANEL
MODEL NO. 11-1601-11

FED CODE NO 96795

ISSUE CODE 1 G

SCALE

DWG NO 448080

Gould Inc
Instruments Division
Cleveland Ohio 44114 U.S.A.

Information contained herein is considered proprietary to GOULD INC., INSTRUMENT SYSTEMS DIVISION. Release of this information is to facilitate the servicing and maintenance of Gould equipment only.

Under no circumstances shall this information be transmitted, reproduced, disclosed to, or used by any person or organization other than those engaged in such activities without the express written consent of GOULD INC., INSTRUMENT SYSTEMS DIVISION

REVISIONS

SYM.	DESCRIPTION	DATE	APPROVAL
A-1	REVISED PER MARKED PRINT DCN 4804	7-21-65 Dated	7/22/65
A-2	REVISED WIRE COLORS FROM DS-1 AND S-1 TO TB-11 DCN 5550	10-24 65	10-25 65
B-1	REVISED TO MEET UL SPEC. DCN 18124	2-19-75	
C-1	ADDED 1,2,A,B TO MASTER POWER SWITCH	3/4/77 DCN 22790	SMOTZER

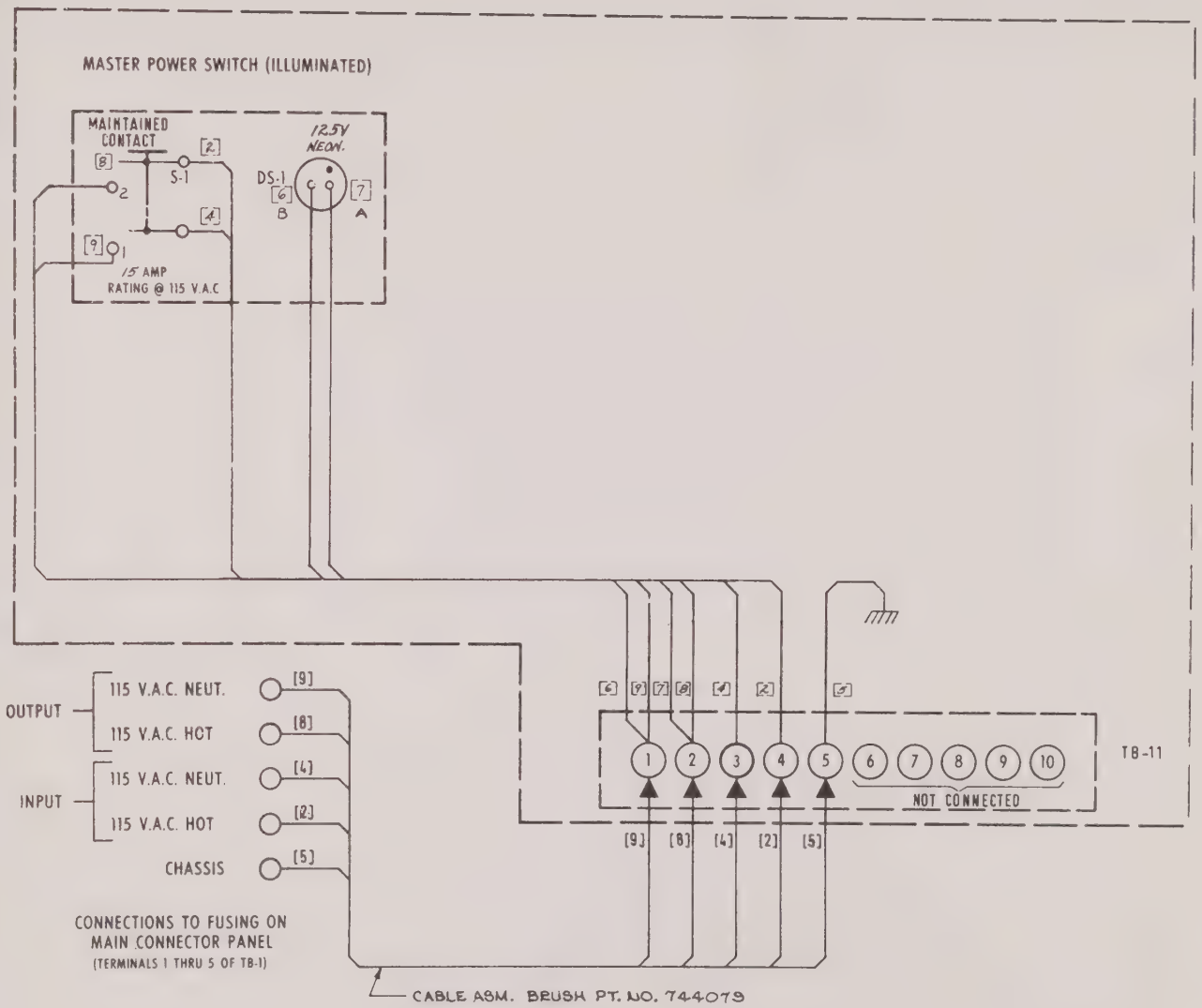

444120

2. WIRE COLORS IN EIA CODE SHOWN IN BRACKETS [ ]

1. ARROWS AT TERMINALS INDICATE LUG CONNECTIONS.

NOTES:

Gould Inc.
Instrument Systems Division
Cleveland, Ohio 44114 U.S.A.

REQD	ITEM	PART NUMBER	DESCRIPTION	REMARKS	CML	NEXT ASSY	USED ON
			LIST OF MATERIAL			APPLICATION	

11-1603-10

UNLESS OTHERWISE SPECIFIED
DIMENSIONS ARE IN INCHES
TOLERANCES ANGLES = ± ½°
XX = ± .015
XXX = ± .005 SURFACE = √
MATL
ADD FIN
FIRST USE

DR. BY JORDAK 3-02-63 DATE
CH. BY DATE
APPR DATE

NAME: DIAGRAM, WIRING - SYSTEM POWER PANEL ASM.

CODE IDENT.
ISSUE CODE G
SCALE —
WT

DWG NO 444120

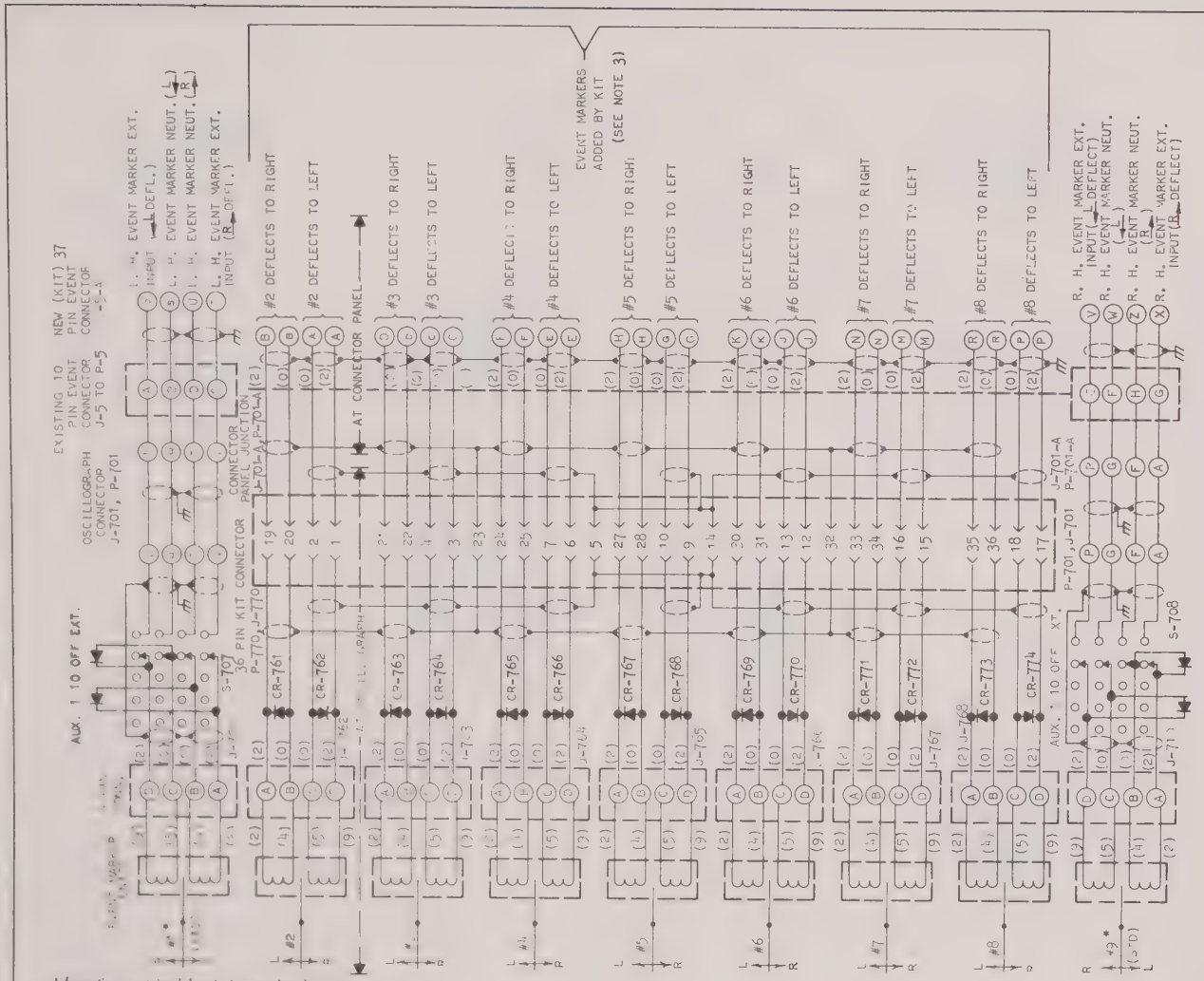

REVISIONS			
SYM.	DESCRIPTION	DATE	APPROVAL
A-1	ADDED CR-761 THRU 774 & NOTE 5. DCN 6915 E.H.	5/24/66	Wastl E W E
A-2	J-5-A WAS: 43 PIN IN ERROR DCN 7446 E.H.	7/9/66	[illegible]
A-3	ADDED MOD. #11-2221-02	3/12/78	C. Fowler
B-1	DELETED BOTTOM VIEW	10-	
B-2	DELETED NOTE 2	23-	
B-3	REVISED NOTE 3 DCN 27188/K. HAMILTON	80	

*5. EVENT CHANNELS #1 AND #9 SHOWN FOR REFERENCE ONLY.

4. SMALL TYPED LETTERS (AS OPPOSED TO LARGE LETTERS) SIGNIFY THE LOWER CASE LETTERS SHOWN ON THE CONNECTOR.

3. OBSERVE POLARITY TO MAKE PIN A OR D OF EVENT MARKER GO POSITIVE.

1. WIRE COLORS IN EIA CODE SHOWN IN PARENTHESES ( ).

NOTES:

Information contained herein is considered proprietary to GOULD INC., INSTRUMENT SYSTEMS DIVISION. Release of this information is to facilitate the servicing and maintenance of Gould equipment only.

Under no circumstances shall this information be transmitted, reproduced, disclosed to, or used by any person or organization other than those engaged in such activities without the express written consent of GOULD INC., INSTRUMENT SYSTEMS DIVISION

Gould Inc.
Instrument Systems Division
Cleveland, Ohio 44114 U.S.A.

MODEL NO. 11-2221-02

BY	DATE	NAME	
[illegible]	7-15-65	DIAGRAM, WIRING MODEL NO. 11-2221-00 MODEL NO. 11-2221-01	
[illegible]	[illegible]	CODE IDENT	ISSUE
[illegible]	7/1/65		CODE G

262388

SHEET 1 OF 1

REPR . 262393

REVISIONS			
SYM.	DESCRIPTION	DATE	APPROVAL

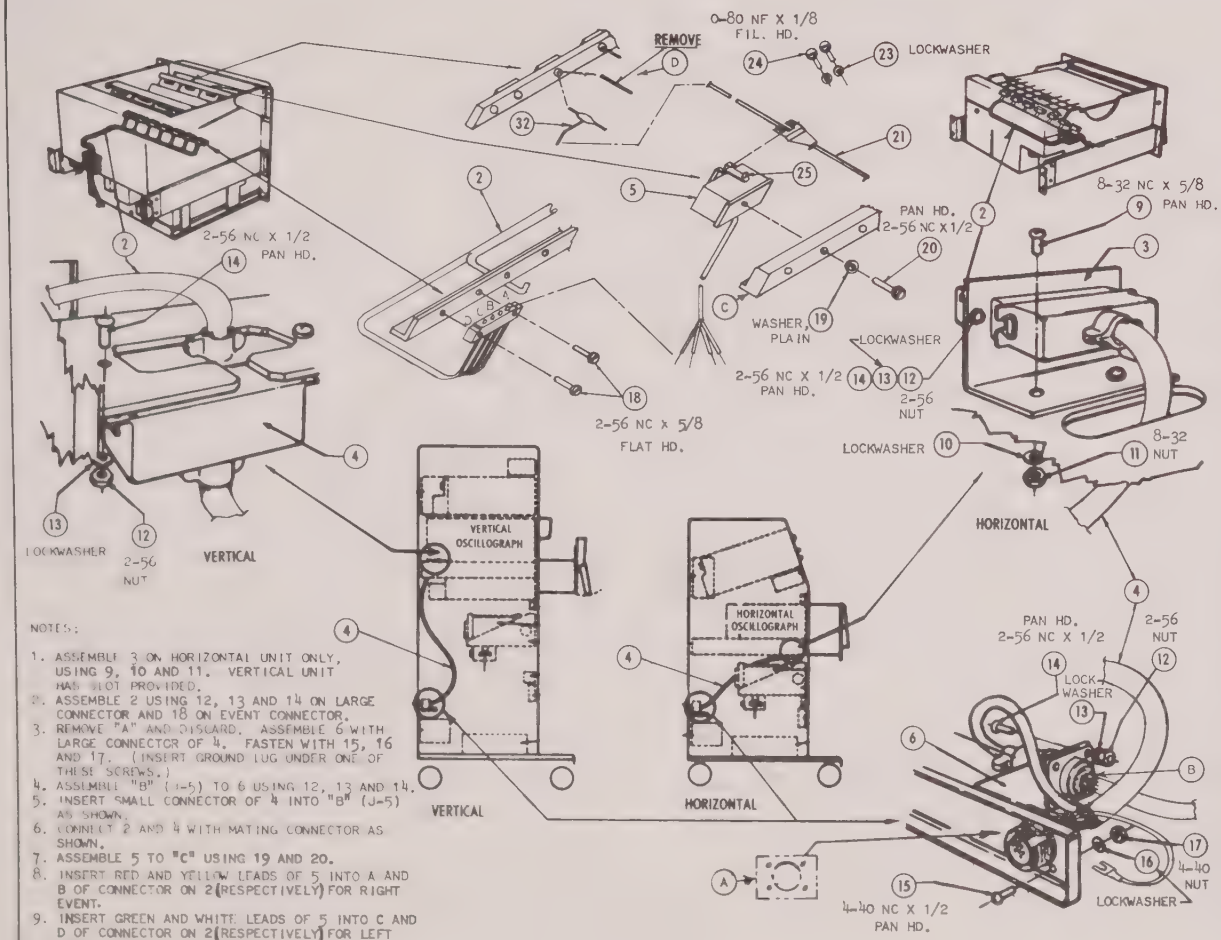

NOTES:

1. ASSEMBLE 3 ON HORIZONTAL UNIT ONLY, USING 9, 10 AND 11. VERTICAL UNIT HAS SLOT PROVIDED.
2. ASSEMBLE 2 USING 12, 13 AND 14 ON LARGE CONNECTOR AND 18 ON EVENT CONNECTOR.
3. REMOVE "A" AND DISCARD. ASSEMBLE 6 WITH LARGE CONNECTOR OF 4. FASTEN WITH 15, 16 AND 17. (INSERT GROUND LUG UNDER ONE OF THESE SCREWS.)
4. ASSEMBLE "B" (J-5) TO 6 USING 12, 13 AND 14.
5. INSERT SMALL CONNECTOR OF 4 INTO "B" (J-5) AS SHOWN.
6. CONNECT 2 AND 4 WITH MATING CONNECTOR AS SHOWN.
7. ASSEMBLE 5 TO "C" USING 19 AND 20.
8. INSERT RED AND YELLOW LEADS OF 5 INTO A AND B OF CONNECTOR ON 2(RESPECTIVELY) FOR RIGHT EVENT.
9. INSERT GREEN AND WHITE LEADS OF 5 INTO C AND D OF CONNECTOR ON 2(RESPECTIVELY) FOR LEFT EVENT.
10. ASSEMBLE 21 USING 23 AND 24.
11. REMOVE "D" FROM MANIFOLD, INSERT 32.
12. REPLACE PEN TUBE ON 32 AND INSERT PEN TUBE OF 21 ON 32 AS SHOWN.
13. ADJUST PEN PRESSURE OF 21 USING 25. VERTICAL PEN PRESSURE TO BE 20 TO 22 GRAMS. IF TRACE DENSITY VARIES, LAP PENS.
14. (SEE 26) MATE FOR CONNECTOR BRUSH PART NO. 241966 USED ON 4.
15. REMOVE LABELS ("E1" THRU "E5") PARTS OF ITEMS-5

ITEM	PART NUMBER	DESCRIPTION	REMARKS	QTY
34	692792	SHIP. LIST&INSTALL. INSTR.	PRINT ONLY	1
33	262388	DIAGRAM, WIRING		1
32	662095	TUBE ASSEMBLY	PART OF ITEM-1	X
31				
30	222640	CARD, CONCEALED DAMAGE		1
29	118259-12	BUSHING, CABLE CLAMP	USED WITH ITEM #26	1
28	118259-16	BUSHING, CABLE CLAMP		1
27	119993-116	CLAMP, CABLE		1
26	241965	CONNECTOR	SEE NOTE #14	*
25	241073-1202	SCREW	PART OF ITEM #5	X
24	20-119917-0002	SCREW	PART OF ITEM #5	X
23	128777-102	LOCKWASHER	PART OF ITEM #5	X
22				
21	11-2821-22	PEN ASSEMBLY, INK		7
20	31-119917-2604	SCREW	PART OF ITEM-5	X
19	1-216741-401	LOCKWASHER	PART OF ITEM-5	X
18	31-119920-2606	SCREW		14
17	31-119998-40	NUT		4
16	1-216741-411	LOCKWASHER		4
15	31-119918-4008	SCREW		4
14	31-119918-2608	SCREW		6
13	1-216741-401	LOCKWASHER		6
12	31-119998-28	NUT		6
11	31-119998-82	NUT		2
10	1-216741-429	LOCKWASHER		2
9	31-119918-6210	SCREW		2
8				
7				
6	341999	BRACKET, CONNECTOR	PART OF ITEM #1	X
5	792567	KIT ASM. EVENT MARKER	PART OF ITEM #1	X
4	862173	CABLE ASM.	PART OF ITEM #1	X
3	341988	BRACKET, CONNECTOR	PART OF ITEM #1	X
2	862172	CABLE ASM.	PART OF ITEM #1	X
1	11-2221-02	KIT ASM., EVENT MARKER	7 INTERCHANNEL	1

LIST OF MATERIAL

UNLESS OTHERWISE SPECIFIED DIMENSIONS ARE IN INCHES AND INCLUDE PLATING	BY	DATE	NAME	Gould Inc Instruments Division Cleveland Ohio 44114 U.S.A.
	DR. FOWLER	3-19-79	SHIPPING LIST AND INSTALLATION INSTRUCTIONS	
	CH.			
	APP.			
MATL	ADD PEN		FED CODE NO 96795	ISSUE CODE 5
FINISH			SCALE NONE	DWG 692792

GOULD

MANUAL PART NO.
13-804185-05

D.C. PREAMPLIFIER
MODEL 13 4185 05

PRINTED 8-30-76
COPYRIGHT 1969

Gould Inc., Instrument Systems Division
3631 Perkins Avenue-Cleveland, Ohio 44114

3RD PRINTING
PRINTED IN U.S.A.

GOULD MODEL 13-4185-05 PREAMPLIFIER
MANUAL REVISIONS
3RD PRINTING

In keeping with the theme of constant improvement, the Gould Documentation Department has included manual revisions in the effort to maintain current manuals. These revisions should be manually inserted in ink on the appropriate pages.

PAGE	PARAGRAPH OR FIGURE	REVISION
8.6	Add New C202	Add new capacitor C202 part number 287614-103
	Schematic 265865 Sheet (3)	Add capacitor across base and emitter of Q202 as shown below: 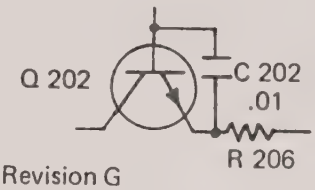 Revision G
	Schematic 265865 Sheet (1)	Add Callout of terminal 4 to S501 thru S508 shown below: 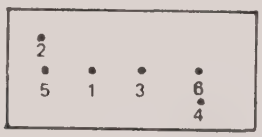 Change S801 (wire Color 9126) From: Wire Harness – A To: Wire Harness – B On S801 change wire (9) to: (4) On S801 change (Wire 4) From: Harness – B To: Harness – A Revision H DCN: 24789

TABLE OF CONTENTS

SECTION	DESCRIPTION	PAGE
I	GENERAL INFORMATION	
	1.1 Introduction	1.1
	1.2 Specifications	1.2
II	INSTALLATION	
	2.1 General	2.1
	2.2 Cabinet Installation	2.1
	2.3 Signal Connections	2.1
	2.4 Outline Dimensions	2.1
III	SERVICING	3.1
IV	OPERATION	
	4.1 General	4.1
	4.2 Front Panel Controls	4.1
	4.3 Internal Control	4.3
V	MAINTENANCE	
	5.1 General	5.1
	5.2 Fluorescent Lamps	5.1
	5.3 Fluorescent Lamp Starters	5.1
	5.4 Lamp Fuse	5.2
VI	CALIBRATION	
	6.1 General	6.1
	6.2 Calibration Procedures	6.1
VII	THEORY OF OPERATION	
	7.1 General	7.1
	7.2 Detailed Description	7.1
VIII	PARTS IDENTIFICATION	8.1

SECTION I
GENERAL INFORMATION

1.1 INTRODUCTION

Gould eight-channel, direct current, Preamplifier, Model 13-4185-05 (Fig. 1-1) is designed for use with Gould multichannel recording systems. The preamplifier provides medium-gain amplification, where inputs are generally of similar character, as in telemetry, system test, or analog computer installations.

Seven attenuator settings (plus OFF) are provided for each channel and are operated by pushbuttons which illuminate when depressed. Pushbuttons are also provided for local and remote operations, including computer start, stop, hold, or reset, plus instantaneous all-channel check for baseline position, calibration and range setting. Toggle switches, one for each channel, provide polarity reversal of the input signal. The full-scale pen positioning and variable gain sensitivity controls are fitted with locking knobs to prevent inadvertent change after desired setting is selected.

Measurement range is 50 millivolts per chart division, to 250 volts full scale for each channel. Inputs are single-ended, grounded, with 50 kilohm input impedance. Circuitry is solid-state with the power supply built in.

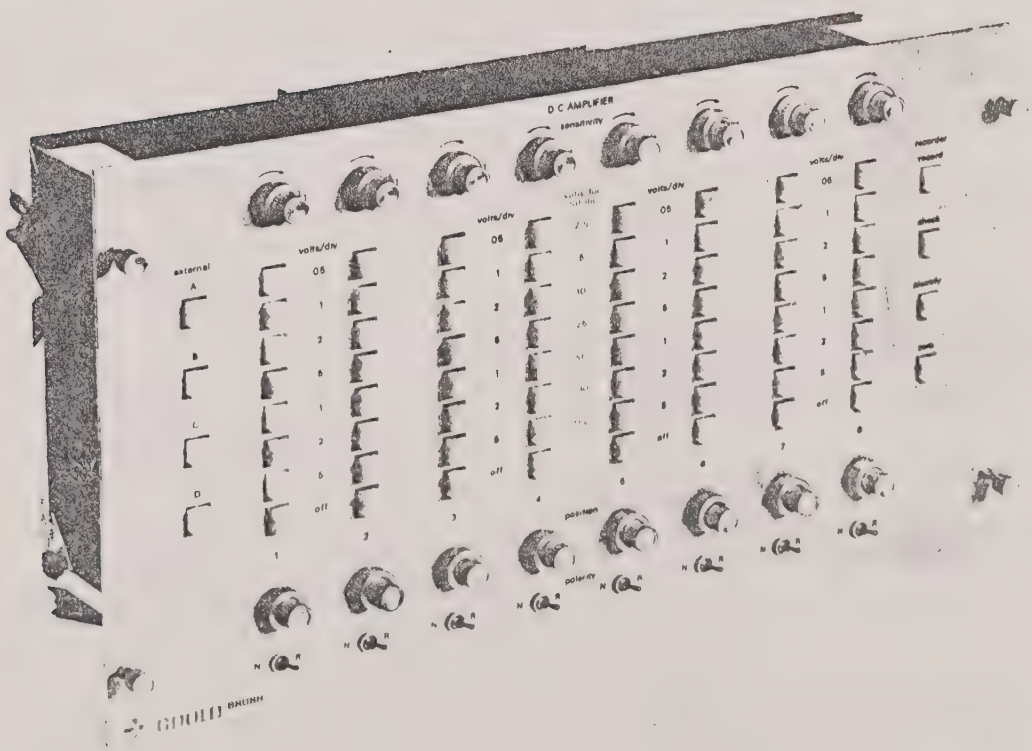

FIGURE 1-1 SOLID STATE PREAMPLIFIER 13-4185-05

1.2 SPECIFICATIONS

The following specifications are pertinent to Preamplifier, Model 13-4185-05.

Signal Input	
Impedance	50K ohm ±1%
Sensitivity (Max)	50 millivolts per division
Pen Position	±75 divisions of dc suppression minimum
Attenuator	
Steps	.05, 0.1, 0.2, 0.5, 1, 2, 5 volts per division and OFF
Maximum Input Voltage	±150 volts between input terminals; ±500 volts between input terminals and chassis
Tolerance	±1/2%
Internal Calibration Source	
Accuracy	±0.2%
Precision	±0.1%
Signal Output	
To Drive Amplifiers	±2.5 volts into 50K ohms.
Noise (on Recorder)	0.2 division peak-to-peak, maximum.
Linearity	±0.05% full scale
Zero Stability with Respect To:	
Time	0.1 division in 8 hours (after 60-second warm-up)
Temperature	0.05% per °C/±10°C from calibration temperature
Line Voltage	0.05 division for ±10% line voltage
Gain Stability with Respect to:	
Time	0.1% per year
Temperature	0.02% per °C/±10°C from calibration ten
Line Voltage	0.02% for ±10% line voltage
Frequency Response	No effect on drive amplifier response
Gain	2.00±1%
Power Input	115±10% volts ac; 50 to 400 Hz
Power Supply	Self-contained

SECTION II
INSTALLATION

2.1 GENERAL

This section provides cabinet installation, signal connections and outline dimensions of the preamplifier.

2.2 CABINET INSTALLATION

Refer to drawing 665864.

2.3 SIGNAL CONNECTIONS

a. A.C. Power

Connect preamplifier three leads to main connector panel terminal board TB-1 as follows:

Green lead to terminal 6

White lead to terminal 7

Black lead to terminal 8

b. Signal Input (Connector J-3 on Main Connector Panel)

NOTE: Connector P-3 (122109) mates with connector J-3 (121047).

Connect input signal as follows:

Channel	Signal Lead To Pin	Common Lead To Pin
1	A	N
2	B	P
3	C	R
4	J	S
5	K	T
6	L	U
7	D	E
8	G	H
Shield		M & F

c. Signal Output

Connect preamplifier output lead wire clusters to terminals 1 thru 4 of terminal boards TB-181, TB-182, TB-183, and TB-184 on rear of drive amplifier frame.

d. External Function (Connector J-2 on Main Connector Panel)

NOTE: Connector P-2 (122105) mates with connector J-2 (121121).

Switch Pushbutton	Pin Connection	Lead
A	C	Black (0)
	G	Red (2)
B	C	Black (0)
	I	Red (2)
C	C	Black (0)
	B	Red (2)
D	C	Black (0)
	F	Red (2)
	J (Common)	Yellow (4)
100 vac (REF)	A (Common)	Black (0)
	H (Hi)	Red (2)

2.4 OUTLINE DIMENSIONS

Refer to drawing 265866.

Information contained herein is considered proprietary to GOULD INC., INSTRUMENT SYSTEMS DIVISION. Release of this information is to facilitate the servicing and maintenance of Gould equipment only.

Under no circumstances shall this information be transmitted, reproduced, disclosed to, or used by any person or organization other than those engaged in such activities without the express written consent of GOULD INC., INSTRUMENT SYSTEMS DIVISION

REVISIONS			
SYM.	DESCRIPTION	DATE	APPROVAL

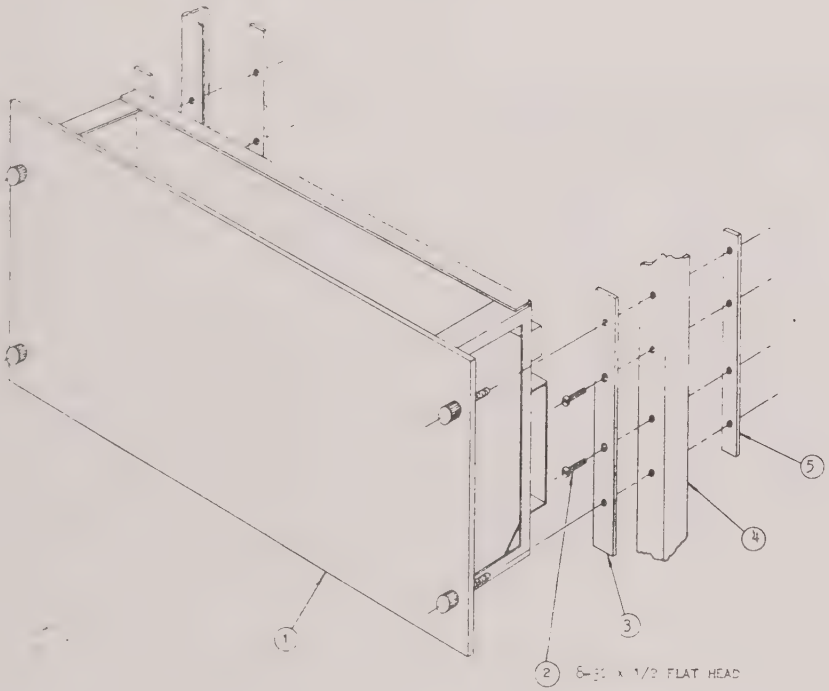

NOTES: 1. NUMBERS IN CIRCLES INDICATE ITEM NUMBERS.
2. ASSEMBLE 3 & 5 TO 4 USING 2.
3. ASSEMBLE 1 TO 4 USING CAPTIVE THUMB SCREWS LOCATED ON FRONT PANEL OF 1.

NO	BRUSH PART NO	DESCRIPTION	QUAN
30			
29			
28			
27			
26			
25			
24			
23			
22			
21			
20			
19	422642	ENVELOPE, MANUAL	1
18	13-804185-05	MANUAL, OPERATING	1
17	222640	CARD, CONCEALED DAMAGE	1
16	417508	CARTON, PACKING	1
15	265456	BAG, PLASTIC	1
14			
13			
12			
11	118259-8	BUSHING, CABLE	1
10	118259-10	BUSHING, CABLE	1
9	119993-110	CLAMP, CABLE	1
8	122105	CONNECTOR, PLUG	1
7	119993-112	CLAMP, CABLE	1
6	122109	CONNECTOR, PLUG	1
5	248888	BAR, NUT	2
4	CABINET	19" RETMA	-
3	248887	BAR, SPACER	2
2	31-119916-8208	SCREW, FLAT HD.	4
1	13-4185-05	PREAMPLIFIER ASM.	1

SHIPPING LIST

Gould Inc.
Instrument Systems Division
Cleveland, Ohio 44114 U.S.A.

BY	DATE	NAME	
MILLER	EH	SHIPPING LIST & INSTALLATION INSTRUCTIONS	
		CODE IDENT 7 96795	ISSUE CODE G

DWG NO. 665864

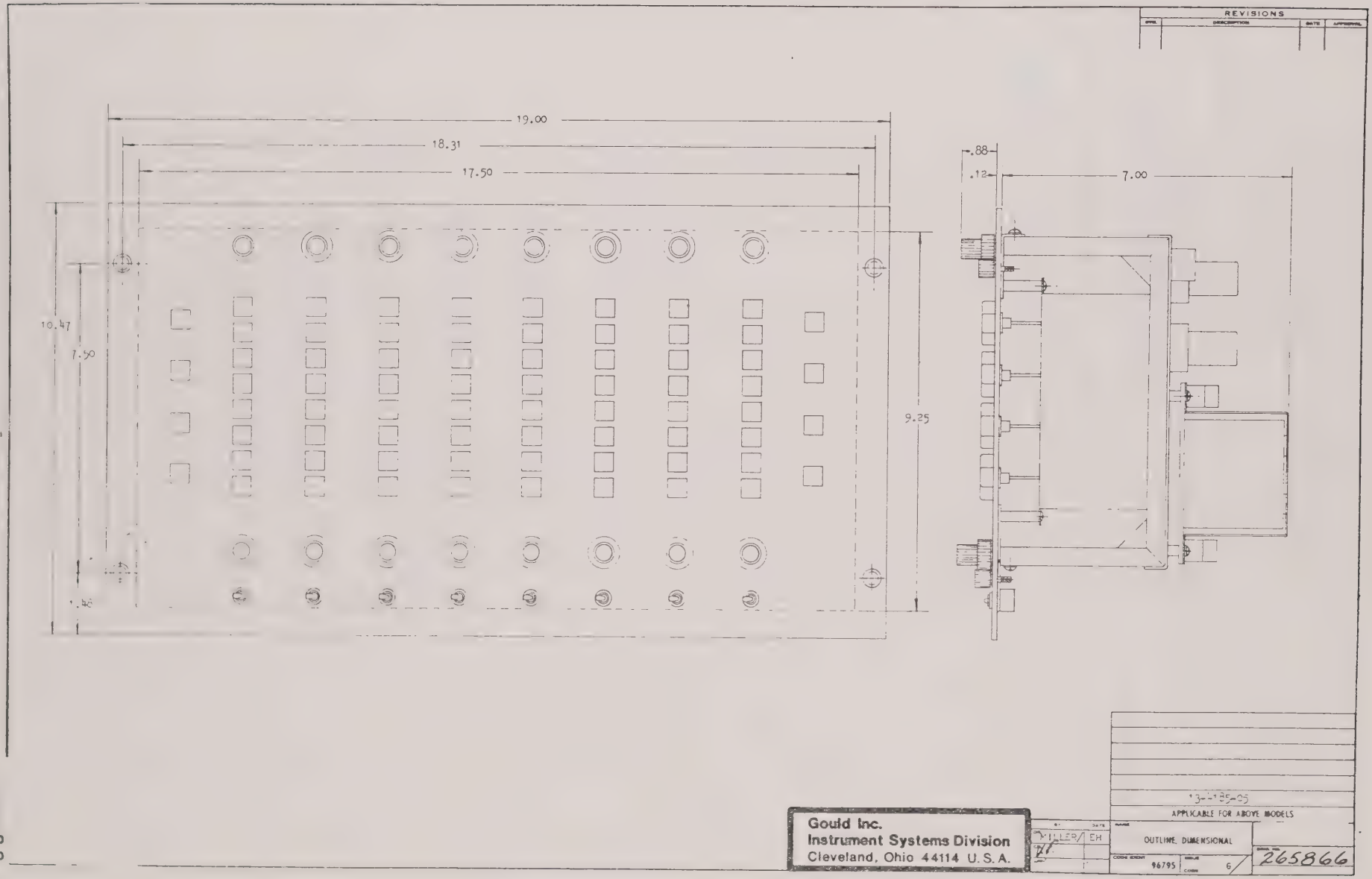
REVISIONS
19.00
18.31
17.50
10.47
7.50
9.25
.88
.12
7.00
13-1135-05
APPLICABLE FOR ABOVE MODELS
OUTLINE, DIMENSIONAL
96795
6
265866
Gould Inc.
Instrument Systems Division
Cleveland, Ohio 44114 U.S.A.

SECTION III
SERVICING

3.1 GENERAL

Prior to the initial operation of the dc preamplifiers and at normal preventive-maintenance intervals, perform the following routine service procedures:

1. Check for proper operation of all controls.
2. Check that circuit boards are mounted properly.
3. Check to be sure all cable connectors are secure.
4. Be sure unit is free from dust or dirt.
5. Check for proper operation of lights and starters.

SECTION IV
OPERATION

4.1 GENERAL

This section describes and illustrates the controls necessary for operating the Solid State Preamplifier 13-4185-05.

4.2 FRONT PANEL CONTROLS

NOTE: The circled numbers in Figure 4-1 correspond with the items listed below.

Item No	Control	Description
1	EXTERNAL Function Group	The external function switches are convenience controls used when recorder is operated with a computer or remote system. Four pushbuttons (A), (B), (C) and (D) provide contact closures which enable the operator to control computer reset (initial conditions) hold, or run modes of operation from the recorder. They are momentary switches and though intended for analog computer use, they may be used for any remote control operations where such switch closures are needed.
2	VOLTS/DIV Attenuation Group	The attenuator buttons are located in the center of the panel with eight attenuator positions for each channel expressed in volts per chart division. When the off button is pressed, the amplifier input is grounded. Signal input resistance is always 50K at full clockwise (detent) position of the variable sensitivity controls (up to 200K if sensitivity potentiometer is at minimum sensitivity).
3	Variable SENSITIVITY X1 Controls	The variable sensitivity controls located across top of the panel must be in full clockwise (detent) position to obtain accurate attenuation from the fixed pushbuttons values. There is a control for each channel. By rotating a variable sensitivity adjustment control knob counterclockwise, intermediate sensitivities between the fixed pushbutton values may be obtained. Each control is fitted with a locking knob so that when turned in a clockwise direction, inadvertent turning of the variable sensitivity control is difficult.
4	RECORDER Group	A group of four pushbuttons which operate as follows: RECORD – Pressed for normal operation of the system. Input signals are connected to their respective channels through the attenuator circuits. **NOTE: When a preamplifier function other than RECORD is used, the preamplifier input impedance will change. The resultant impedance will depend upon the individual attenuator setting and will range from 50K ohm in the OFF position to an open circuit in the .05 VOLTS/DIV position.**

Item No	Control	Description
4	RECORDER Group (continued)	CHECK – Used to check or calibrate both the drive amplifier and preamplifier system. Removes external signals and substitues standard 1.25 volt calibration signal for 25 division deflection.
		NOTE: CAL switch on rear of preamplifier must be in INT position. Unless external calibration signal is supplied (see Para. 4.3).
		IDENTIFY – A convenience control which allows simultaneous recording of all attenuator settings, polarity switch positions, and other data pertinent to the measurements being recorded. As long as it is pressed, this momentary contact switch causes all active analog pens to deflect. The change in position between the pressed and released button position provides a permanent record on the chart of each attenuator setting and the pen polarity.
		ZERO – Pens of all channels return to their zero signal voltage positions as controlled by pen position knobs when this button is pressed.

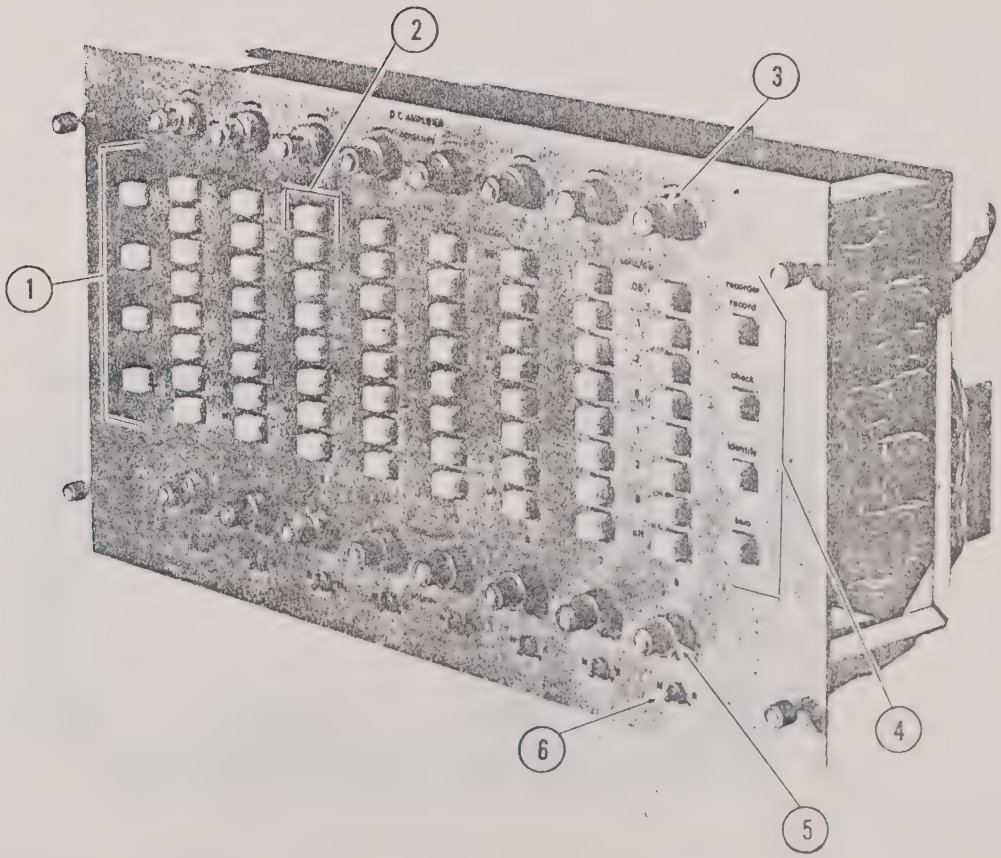

FIGURE 4-1. CONTROL DESCRIPTION

Item No	Control	Description
5	Pen POSITION	Eight pen position controls, one for each channel, are located on the bottom of the Attenuator and Control Panel. These controls permit each pen to be positioned anywhere within the channel and allows either edge of the channel, or any point between, to be used as a base line (zero signal position). Each control is fitted with a locking knob so that once a pen is positioned, inadvertent turning becomes difficult.
6	POLARITY Reversal	Eight switches, one for each channel. Permits polarity of output signal to be changed. Signal position within channel will be displayed on opposite side of base zero line.

4.3 INTERNAL CONTROL

NOTE: Circled number in Figure 4-2 corresponds to item number listed below:

Item No	Control	Description
1	Calibration Switch	INT - Applies a standard 1.25 volt internal calibration signal for 25 division deflection to the pen drive amplifier when the CHECK button of the preamplifier RECORDER group is depressed. EXT - With a +100 ±0.1% -volt reference signal applied to pins A and H of connector J 2, a 1.25 volt calibration signal for a 25-division deflection is applied to the pen drive amplifier when CHECK button of preamplifier RECORDER group is depressed.

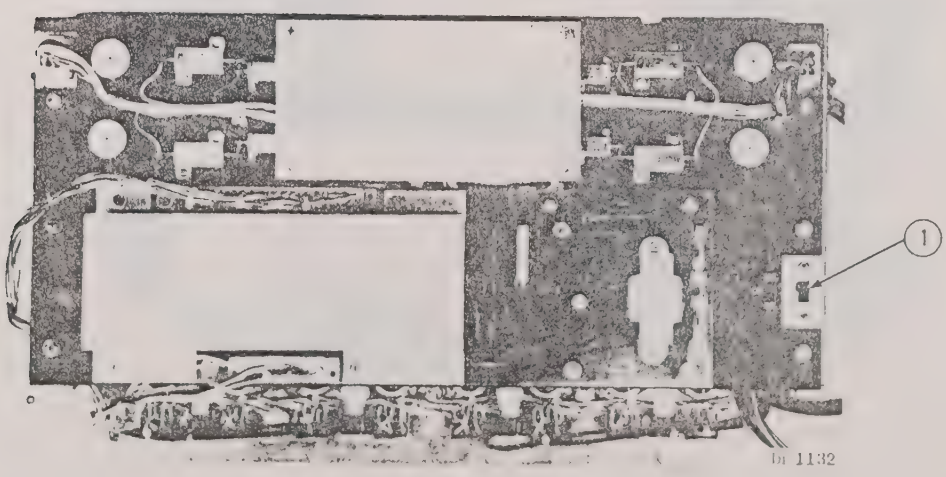

FIGURE 4-2 CONTROL DESCRIPTION - INTERNAL

SECTION V
MAINTENANCE

5.1 GENERAL

The construction of the solid state preamplifier features maximum operating efficiency and dependability with a minimum of maintenance requirements.

This section contains instructions for replacement of fluorescent lamps and starters.

5.2 FLUORESCENT LAMPS

NOTE: Refer to Figure 5-1.

a. Removal

1. Turn off power to unit and disconnect power cable.
2. Loosen four captive thumb screws and tilt top of preamplifier out while bottom of preamplifier is supported on top of SYSTEM POWER panel.
3. Rotate fluorescent lamp until prongs on lamp are aligned with slots in lamp upper socket.
4. Slide end of lamp out of upper socket and gently lift lamp out of unit.

b. Installation

1. Carefully slide fluorescent lamp into unit.
2. Align prongs on lamp with slot in upper socket and insert lamp in lower socket.
3. Press lamp into upper socket and rotate to lock into place.
4. Install preamplifier in cabinet and secure with four captive thumb screws.

5.3 FLUORESCENT LAMP STARTER

a. Removal

1. Turn off power to unit and disconnect power cable.
2. Loosen four captive thumb screws and tilt top of preamplifier out while bottom of preamplifier is supported on top of SYSTEM POWER panel.

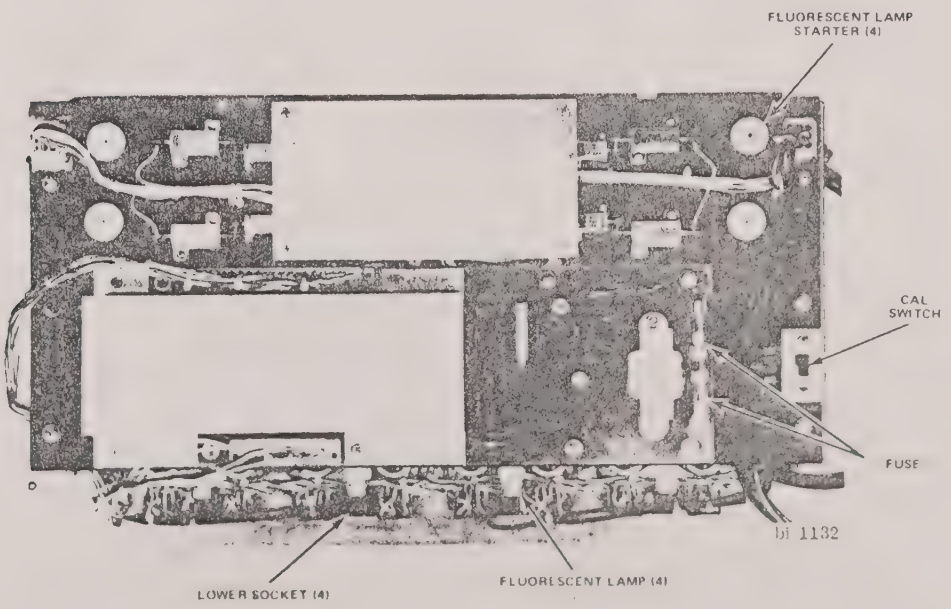

FIGURE 5-1 FLUORESCENT LAMP AND STARTER REPLACEMENT

3. Rotate starter counterclockwise and pull starter from socket.

b. Installation

1. Insert starter prongs into socket and rotate clockwise to lock in place.

NOTE: If fluorescent lamps do not light after starter replacement remove starter, rotate 180 degrees, and insert into socket.

2. Install preamplifier in cabinet and secure with four captive thumb screws.

5.4 LAMP FUSE

Lamp circuit is separately fused. If all lamps fail to light, lamp fuse should be checked.

1. Turn power off and disconnect power cable.
2. Remove preamplifier from cabinet (refer to Para. 2.2).
3. Remove cover to expose lighting circuitry.
4. Check (See Fig. 5-1) fuse and replace if defective.

SECTION VI
CALIBRATION

6.1 GENERAL

This section describes and illustrates the procedures for calibrating the preamplifier.

NOTE: A Differential Voltmeter, John Fluke, Model 803B or equivalent and a Signal Generator, Hewlett-Packard, Model 202A or equivalent are required for calibration.

6.2 CALIBRATION PROCEDURES

a. General

No attempt should be made to calibrate unless the performance check, step b, verifies that the preamplifier is definitely out of calibration. If the stated requirements are not obtained, refer to steps c and d for detailed calibration procedures.

NOTE: Procedures are provided for calibrating a single channel, repeat the procedures for each channel to be calibrated.

b. Performance Check

1. Turn on system power and allow 15 minutes for warm-up.
2. Turn all variable SENSITIVITY X1 controls to full clockwise (detent) position.
3. Place oscillograph into operation according to oscillograph manual.
4. Press CHECK button of RECORDER group. All pens should deflect exactly 25 chart divisions to the right.

NOTE: If pens do not deflect exactly 25 chart divisions, refer to steps c and d for detailed calibration procedures.

5. Press RECORD button of RECORDER group.
6. The following input dc signals should give 25 divisions deflection ±0.25 division at the attenuator settings indicated for each channel.

NOTE: Refer to Paragraph 2.2b for connecting input signal.

dc SIGNAL (Volts)	ATTENUATOR SETTINGS (Volts/Division)
+ 100.00	.05
+ 50.00	.1
+ 25.00	.2
+ 10.00	.5
+ 5.00	1.0
+ 2.50	2.0
+ 1.00	5.0
0.00	OFF

NOTE: All voltages are measured with respect to common.

c. Balance Adjustment

WARNING: CHECK TO BE SURE SYSTEM POWER SWITCH IS OFF AND DISCONNECT POWER CABLE.

1. Loosen four captive thumb screws on front of oscillograph and slide oscillograph out as far as possible.
2. Place a board (wood or composition) across top of oscillograph to act as a table for the preamplifier.
3. Remove preamplifier from cabinet (refer to Para. 2.2) and place preamplifier on oscillograph.
4. Remove printed circuit board cover assembly.

NOTE: Check to be sure all amplifier boards are properly installed.

5. Turn on system power.
6. Use a signal generator and connect a 60-cycle per second signal with a 5-volt peak-to-peak amplitude to each channel at input connector J-3.
7. Press OFF button of attenuation group.
8. Operate oscillograph at a chart speed of 20 millimeters per second.
9. Zero pens at chart center with the pen POSITION control.

10. Press the .05 VOLTS/DIV button.

11. Adjust resistor R-103 on amplifier board (Fig. 6-1) until ac signal displayed on chart is the same amplitude when the polarity switch is changed from normal (N) to reverse (R) position.

d. Internal Calibration Voltage

1. Connect a differential voltmeter across contacts 1 and 2 of amplifier board (Fig. 6-1).

2. Press preamplifier OFF button. Voltage on meter will read zero.

3. Press preamplifier CHECK button of RECORDER group. (CAL switch must be in INT (Internal) position. (see Fig. 5-1)

4. Adjust resistor R-207 on power supply board (Fig. 6-2) until voltage on meter reads 1.250 ±.001 volt.

5. Check that pen on chart deflected 25 divisions. If not, refer to calibration section in system manual for channel gain adjustment.

6. Press oscillograph STOP button.

7. Disconnect differential voltmeter from amplifier board.

8. Disconnect signal generator from connector J-3.

9. Turn off system power.

10. Install preamplifier printed circuit board cover.

11. Install preamplifier in cabinet (refer to Para. 2.2).

12. Remove board from oscillograph, slide oscillograph into cabinet, and secure with four captive thumb screws.

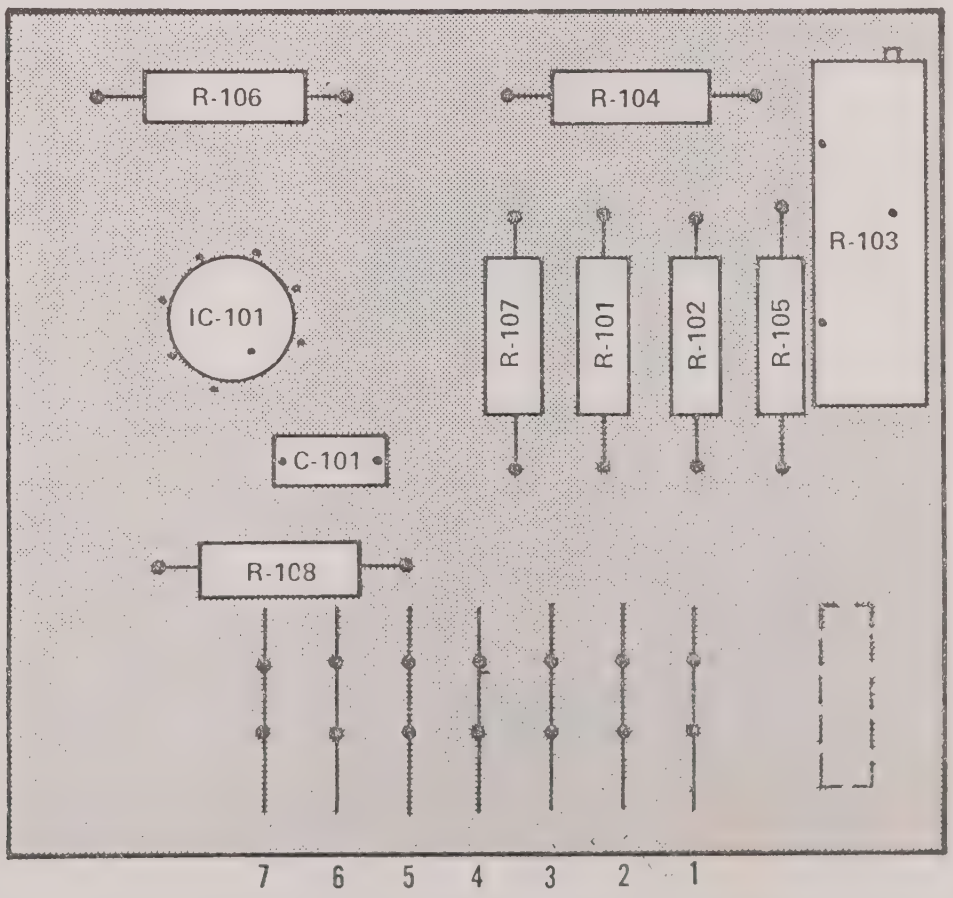

FIGURE 6-1 AMPLIFIER BOARD - PLAN VIEW

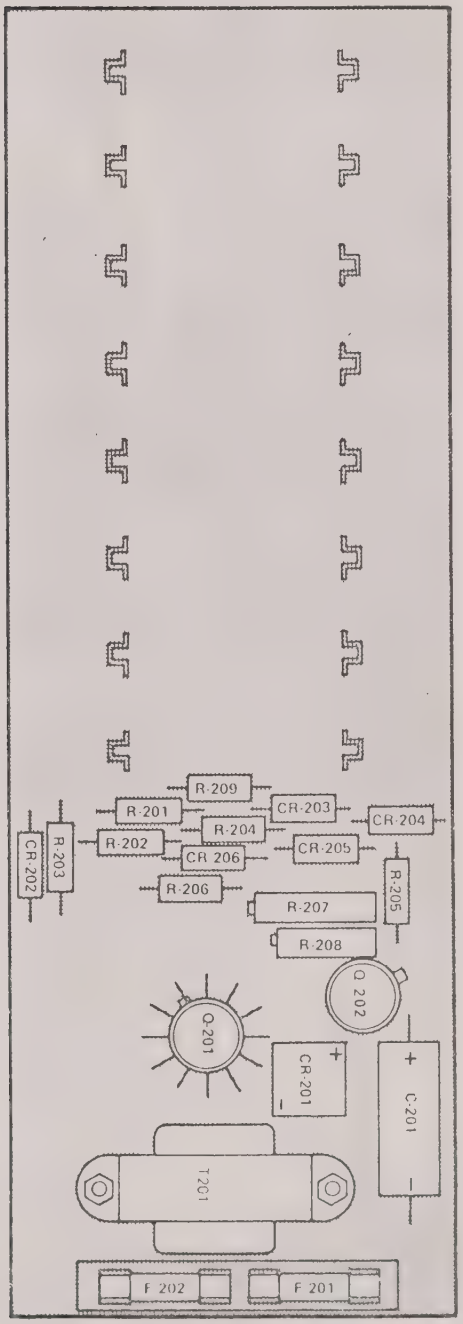

FIGURE 6-2 POWER SUPPLY BOARD - PLAN VIEW

SECTION VII
THEORY OF OPERATION

7.1 GENERAL

Preamplifier, Model 13-4185-05 (Fig. 7-1), consists of eight plug-in differential operational amplifier assemblies mounted on a common power supply board. Attenuation of the input signal is accomplished by front panel controls, as is pen position and signal polarity.

The input signal is applied to the attenuator network, thru the RECORDER group and POLARITY reversal switches and into the operational amplifier assemblies. A second input from the pen POSITION potentiometer biases the input signal to be positioned on the chart.

When polarity reversal switch is placed in N (Normal) position, the signal from the RECORDER group switch is coupled thru the operational amplifier to the pen drive amplifier. When the reversal switch is placed in the R (Reverse) position, the polarity of the signal from the RECORDER group switch is reverse-coupled thru the operational amplifier to the pen drive amplifier.

7.2 DETAILED DESCRIPTION

a. Power Supply (Fig. 7-2)

The power input is supplied by transformer T-201 thru rectifier CR-201 and a filter C-201 to a current regulator circuit comprised of diode CR-202, transistor Q-201, and resistors R-201 thru R-203. The current passed by transistor Q-201 drives the voltage regulator diodes CR-203 thru CR-206 to supply ±10 volts for the individual amplifier circuits.

Divider network, consisting of resistors R-204, R-205 and R-207, comprises the CAL (calibrate) voltage supply. Resistors R-206 and R-208 and transistor Q-202 provide regulated voltage for the identify circuitry and resistor R-209 provides a load on the negative (—) side of the voltage supply.

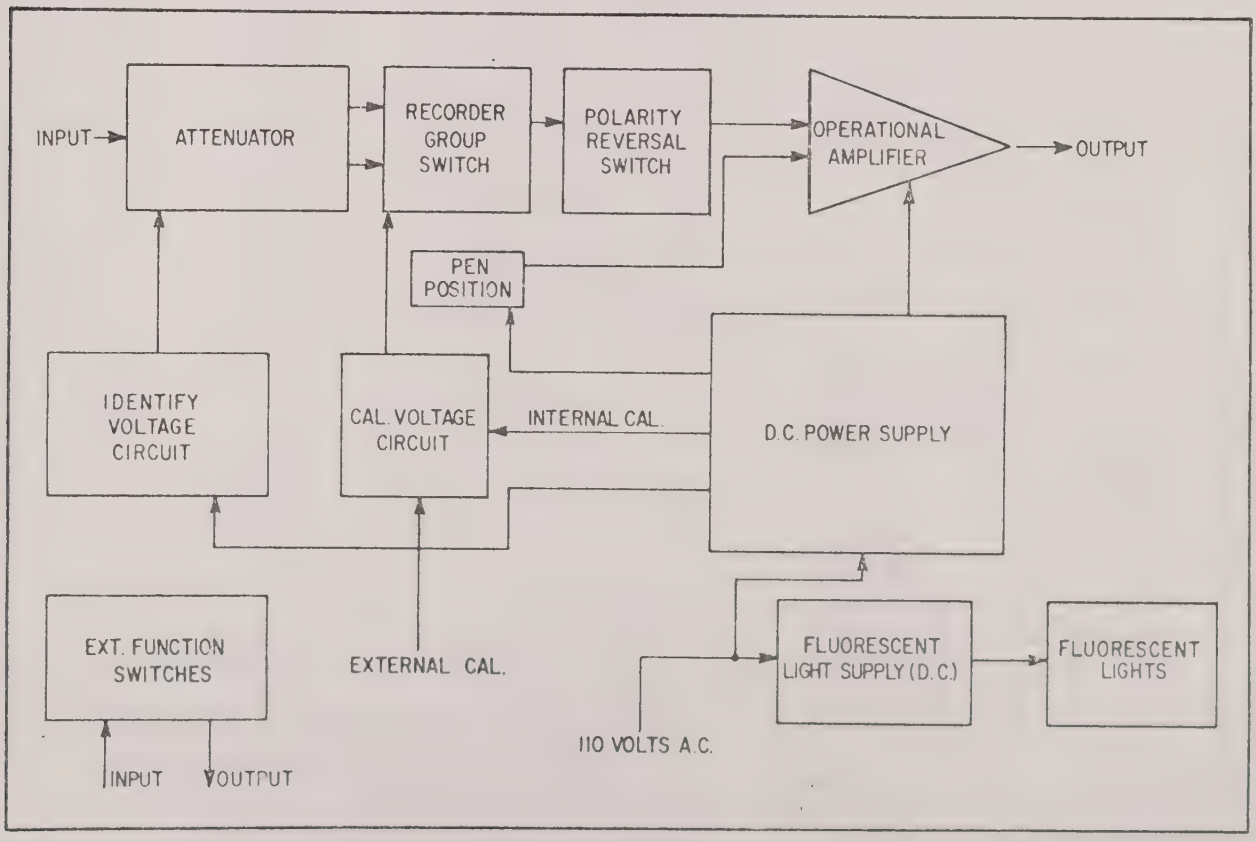

FIGURE 7-1 PREAMPLIFIER 13-4185-05 - BLOCK DIAGRAM

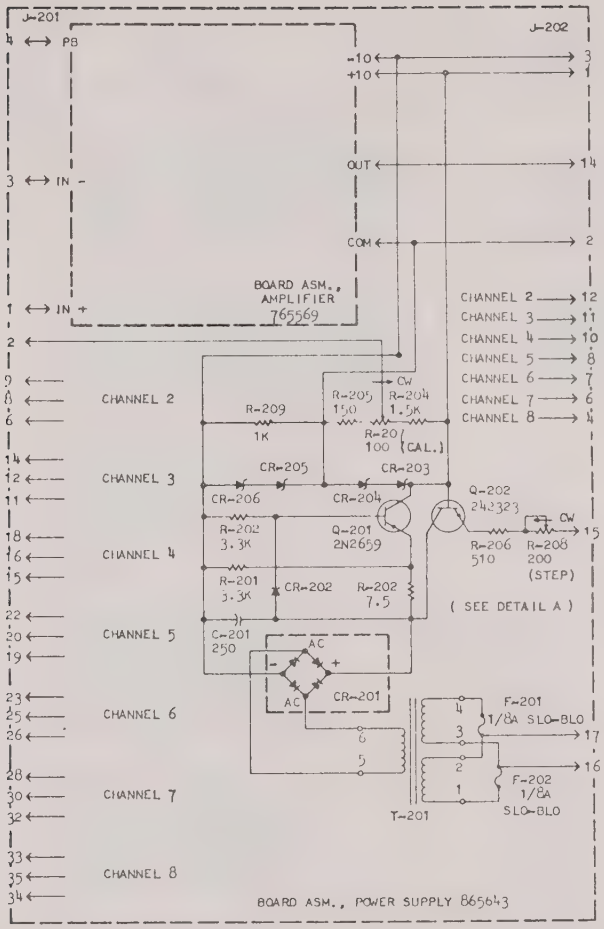

FIGURE 7-2 POWER SUPPLY BOARD - CIRCUIT DIAGRAM

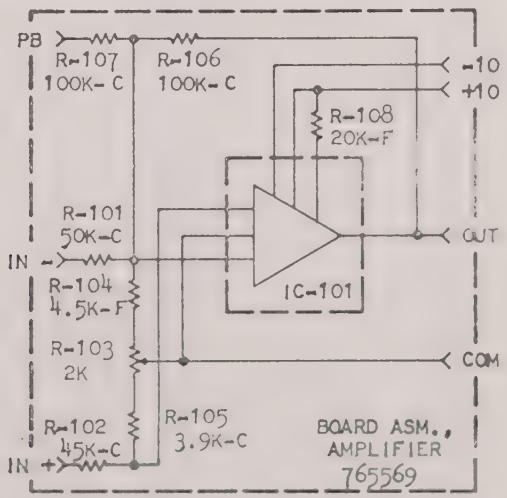

FIGURE 7-3 AMPLIFIER BOARD ASSEMBLY - CIRCUIT DIAGRAM

b. Amplifier Board Assembly (Fig. 7-3)

Each amplifier board consists of a direct-coupled, differential amplifier with three inputs thru resistors R-101, R-102 and R-107. Normal gain is fixed by resistors R-101 and R-106. Reverse gain is varied and controlled by resistors R-102, R-105 and R-103. Resistor R-104 provides stability in the reverse mode and resistor R-108 controls offset.

SECTION VIII
PARTS IDENTIFICATION

EXPLODED VIEW PARTS LIST
PREAMPLIFIER 13-4185-05

INDEX NO	PART NUMBER	DESCRIPTION	SYMBOL NO
1	854709	Bracket Asm, Sensitivity	
2	247236	Resistor, Variable with Switch	R-701/S-701
3	247236	Resistor, Variable with Switch	R-702/S-702
4	247236	Resistor, Variable with Switch	R-703/S-703
5	247236	Resistor, Variable with Switch	R-704/S-704
6	247236	Resistor, Variable with Switch	R-705/S-705
7	247236	Resistor, Variable with Switch	R-706/S-706
8	247236	Resistor, Variable with Switch	R-707/S-707
9	247236	Resistor, Variable with Switch	R-708/S-708
10	365705	Bracket, Chassis Support R.H.	
11	9-247923-9	Connector, 9 Pin	J-304
12	865726	Chassis, Subasm (see sep. view)	
13	246295	Connector	P-201
14	246295	Connector, P.C. Female	P-202
15	265914	Switch	S-401
16	765704	Switch, Pushbutton (see sep. view)	S-508
17	765704	Switch, Pushbutton	S-507
18	765704	Switch, Pushbutton	S-506
19	765704	Switch, Pushbutton	S-505
20	765704	Switch, Pushbutton	S-504
21	765704	Switch, Pushbutton	S-503
22	765704	Switch, Pushbutton	S-502
23	765704	Switch, Pushbutton	S-501
24	765706	Switch Asm (see sep. view)	S-601
25	247719	Resistor, Variable	R-709
26	247719	Resistor, Variable	R-710
27	247719	Resistor, Variable	R-711
28	247719	Resistor, Variable	R-712
29	247719	Resistor, Variable	R-713
30	247719	Resistor, Variable	R-714
31	247719	Resistor, Variable	R-715
32	247719	Resistor, Variable	R-716
33	865710	Bracket Asm	
34	248752	Switch, DPDT	S-716
35	248752	Switch, DPDT	S-715
36	248752	Switch, DPDT	S-714
37	248752	Switch, DPDT	S-713
38	248752	Switch, DPDT	S-712
39	249752	Switch, DPDT	S-711
40	248752	Switch, DPDT	S-710
41	248752	Switch, DPDT	S-709
42	232275	Screw, Panel	
43	240093	Nut, Plain-knurled	
44	240497	Knob	
45	240498	Nut, Self Lock-knurled	

EXPLODED VIEW PARTS LIST (continued)
PREAMPLIFIER 13-4185-05

INDEX NO	PART NUMBER	DESCRIPTION	SYMBOL NO
46	231183	Knob	
47	231182	Nut, Self-Lock-knurled	
48	867281	Panel Subasm, Front	
49	246552-1	Button, Push	
50	121121	Receptacle (on Main Connector Panel)	J-2
51	122105	Connector	P-2
52	665770	Cable Asm, Power	
53	121047	Receptacle (on Main Connector Panel)	J-3
54	122109	Connector	P-3
55	248211-24	Socket, Lamp	
56	248211-24	Socket, Lamp	
57	248211-24	Socket, Lamp	
58	248211-24	Socket, Lamp	
59	108572-11	Bushing, Strain Relief	
60	231961	Lamp, Fluorescent	DS-301
61	231961	Lamp, Fluorescent	DS-302
62	231961	Lamp, Fluorescent	DS-303
63	231961	Lamp, Fluorescent	DS-304
64	248211-24	Socket, Lamp	
65	248211-24	Socket, Lamp	
66	248211-24	Socket, Lamp	
67	248211-24	Socket, Lamp	
68	232895	Switch, Slide SPDT	S-801
69	9-247923-9	Connector, 9 Pin	J-303
70	365703	Bracket, Chassis Support L.H.	

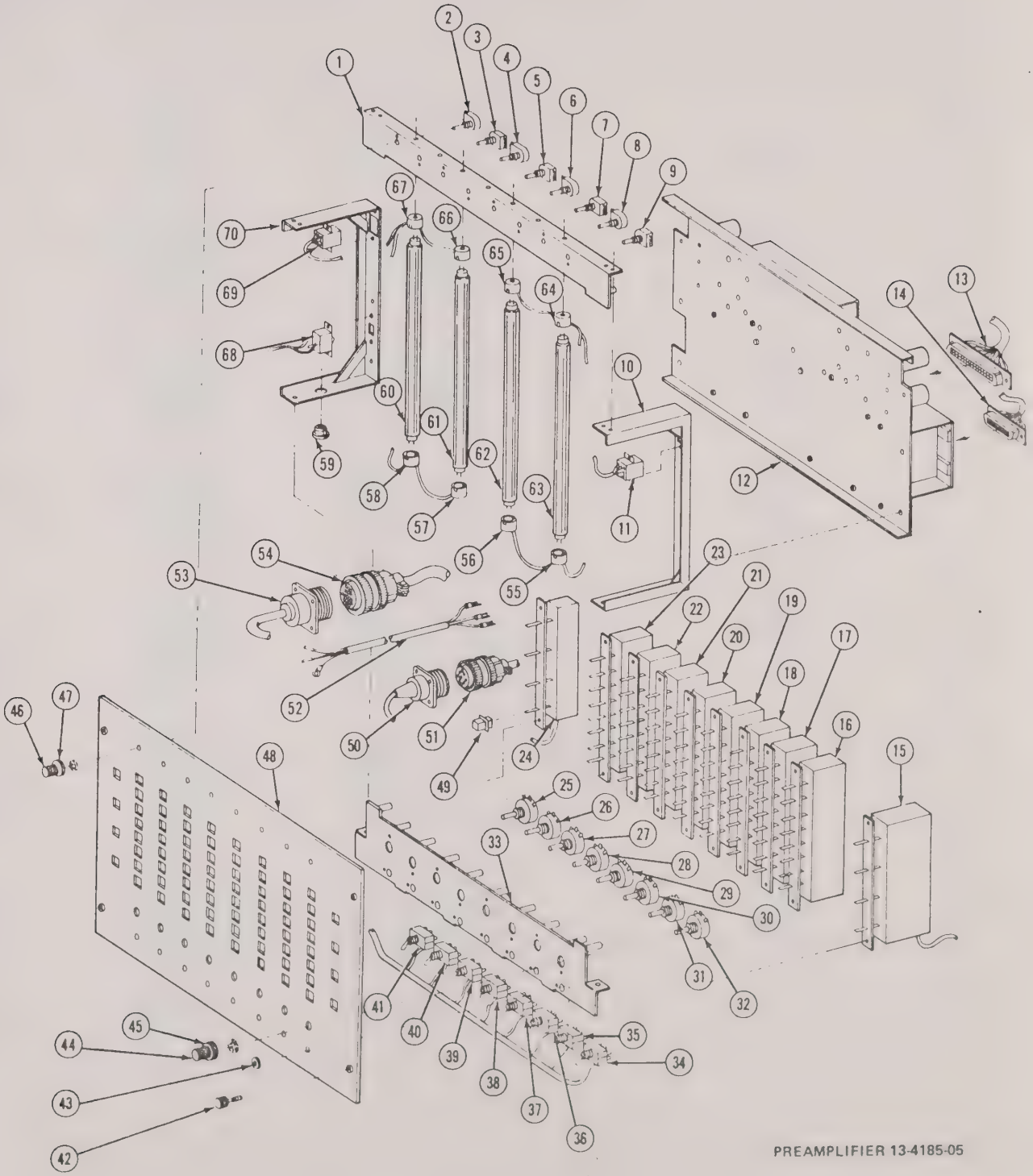

PREAMPLIFIER 13-4185-05

EXPLODED VIEW PARTS LIST
PREAMPLIFIER 13-4185-05 CHASSIS ASSEMBLY 865726

INDEX NO	PART NUMBER	DESCRIPTION	SYMBOL NO
1	9-247924-9	Connector	P-303
2	1-247925	Lamp Starter Socket Contacts	
3	231695	Lamp Starter Socket	
4	231964	Starter, Lamp	S-301
5	231964	Starter, Lamp	S-302
6	3-246015-300	Resistor, 30 ohm	R-302
7	3-246015-300	Resistor, 30 ohm	R-301
8	1-264015-501	Resistor, 500 ohm	R-306
9	1-264015-501	Resistor, 500 ohm	R-305
10	242912-7	Board, Terminal	
11	10-241145-205	Capacitor, 2 mfd	C-802
12	241513-206	Capacitor, 20 mfd	C-806
13	130198-2	Diode, 1N2070	CR-302
14	130198-2	Diode, 1N2070	C-805
15	241513-206	Capacitor, 20 mfd	
16	10-241145-205	Capacitor, 2 mfd	C-801
17	264798-2	Fuse, 1.5 amp	F-301
18	10-241145-205	Capacitor, 2 mfd	C-804
19	241513-206	Capacitor, 20 mfd	C-809
20	130198-2	Diode, 1N2070	CR-304
21	130198-2	Diode, 1N2070	CR-303
22	241513-206	Capacitor, 20 mfd	C-808
23	10-241145-205	Capacitor, 2 mfd	C-803
24	266027	Shield	
25	765702	Cover Asm, Amplifier	
26	765569	Board Asm, Amplifier (see sep. view)	
27	865643	Board Asm, Power Supply (see sep. view)	
28	231964	Starter Lamp	S-304
29	231964	Starter Lamp	S-303
30	665673	Gasket Asm, Lamp starter	
31	665673	Gasket Asm, Lamp starter	
32	1-264015-501	Resistor, 500 ohm	R-308
33	1-264015-501	Resistor, 500 ohm	R-307
34	3-246015-300	Resistor, 30 ohm	R-303
35	3-246015-300	Resistor, 30 ohm	R-304
36	9-247924-9	Connector	P-304
37	865725	Chassis, Subasm	

PREAMPLIFIER 13-4185-05
CHASSIS ASSEMBLY 865726

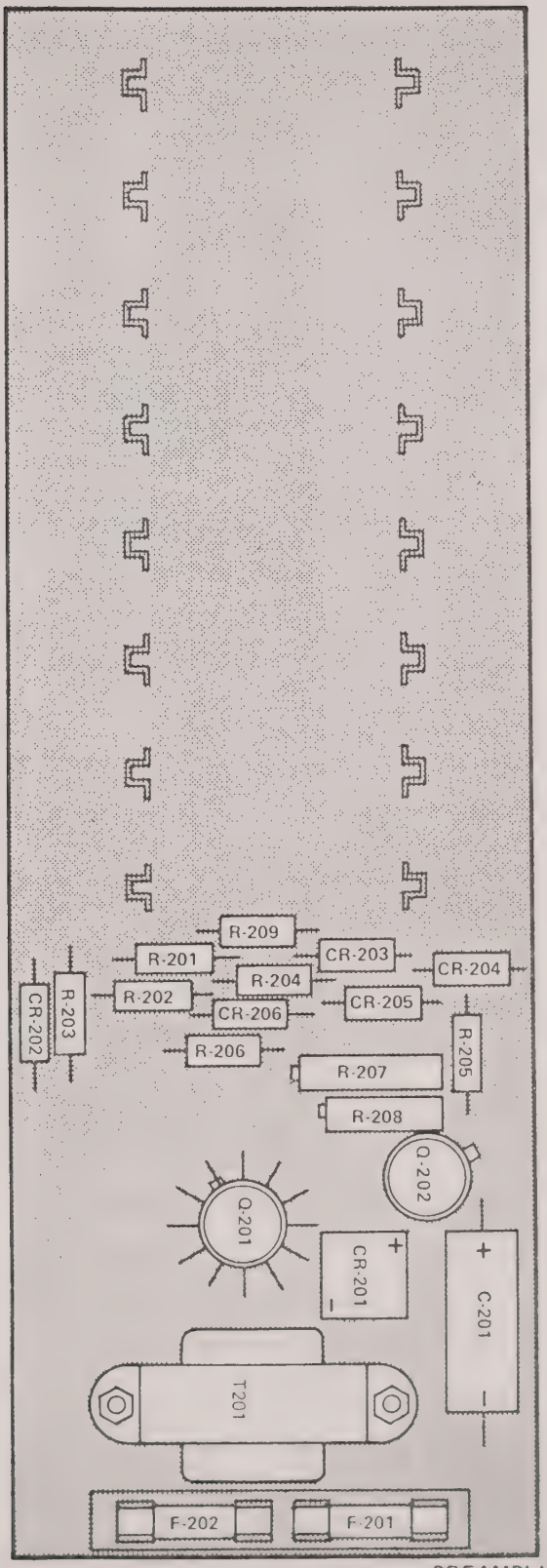

PREAMPLIFIER 13-4185-05
·POWER SUPPLY ASSEMBLY 865643

ELECTRICAL PARTS LIST
AMPLIFIER BOARD ASSEMBLY 763369

SYMBOL NO	PART NUMBER	DESCRIPTION
IC-101	668839	Amplifier, Operational
	consists of:	
	240352-5R0	Capacitor
	230062	Semiconductor
R-101	25-240368-50001	Resistor
R-102	25-240368-45001	Resistor
R-103	268940-202	Resistor, Variable
R-104	1-128182-4501	Resistor
R-105	1-128182-3901	Resistor
R-106	25-240368-10002	Resistor
R-107	25-240368-10002	Resistor

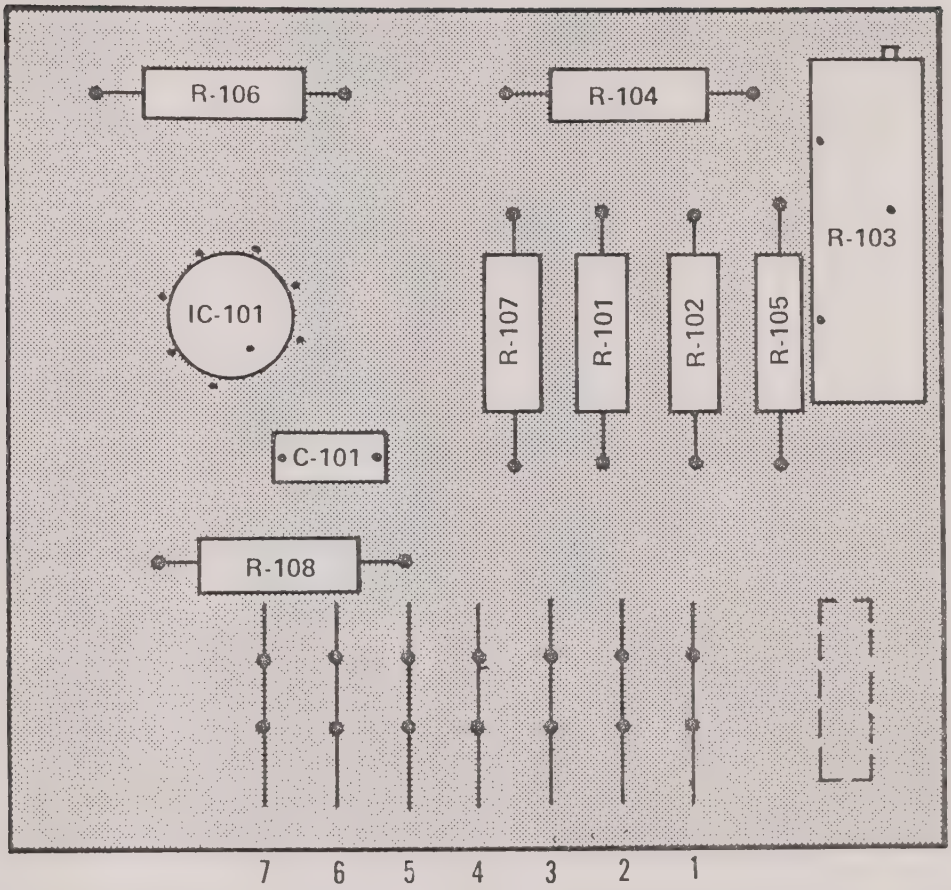

PREAMPLIFIER 13-4185-05
AMPLIFIER BOARD ASSEMBLY 765569

ELECTRICAL PARTS LIST
SENSITIVITY (ATTENUATOR) SWITCH ASSEMBLY 765704

SYMBOL NO	PART NUMBER	DESCRIPTION
R-501	5-115557-510	Resistor
R-502	5-115557-510	Resistor
R-503	5-115557-510	Resistor
R-504	5-115557-510	Resistor
R-505	5-115557-510	Resistor
R-506	5-115557-510	Resistor
R-507	5-115557-510	Resistor
R-508	25-240368-508R0	Resistor
R-509	25-240368-778R0	Resistor
R-510	25-240368-13500	Resistor
R-511	25-240368-29240	Resistor
R-512	25-240368-11111	Resistor
R-513	25-240368-33331	Resistor
R-514	25-240368-25001	Resistor
R-515	25-240368-12501	Resistor
R-516	25-240368-75000	Resistor
R-517	25-240368-25000	Resistor
R-518	25-240368-12500	Resistor
R-519	25-240368-750R0	Resistor
R-520	5-115557-471	Resistor
R-521	5-115557-472	Resistor
S-501	347094	Switch, Pushbutton - 8 Pos

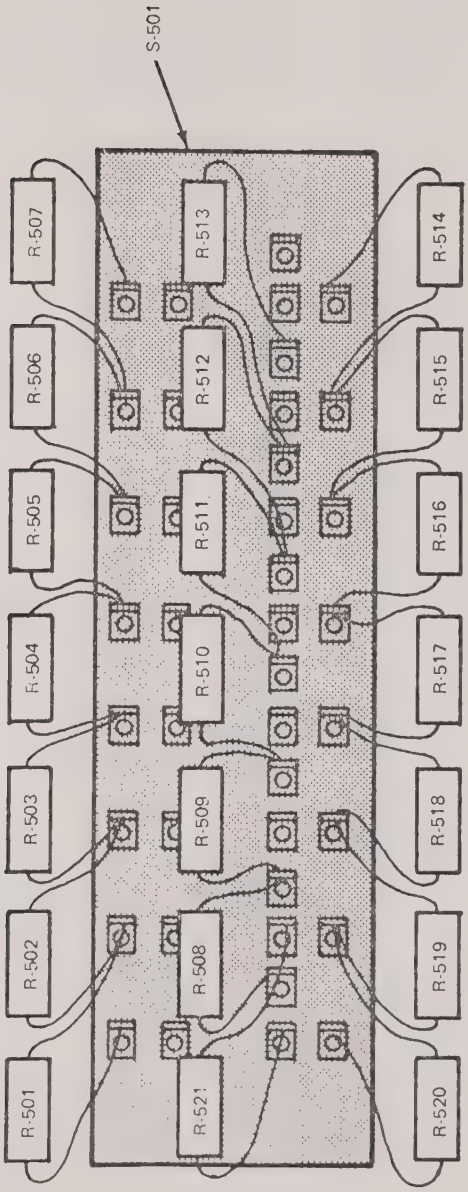

PREAMPLIFIER 13-4185-05
SWITCH ASSEMBLY (ATTENUATOR) 765704

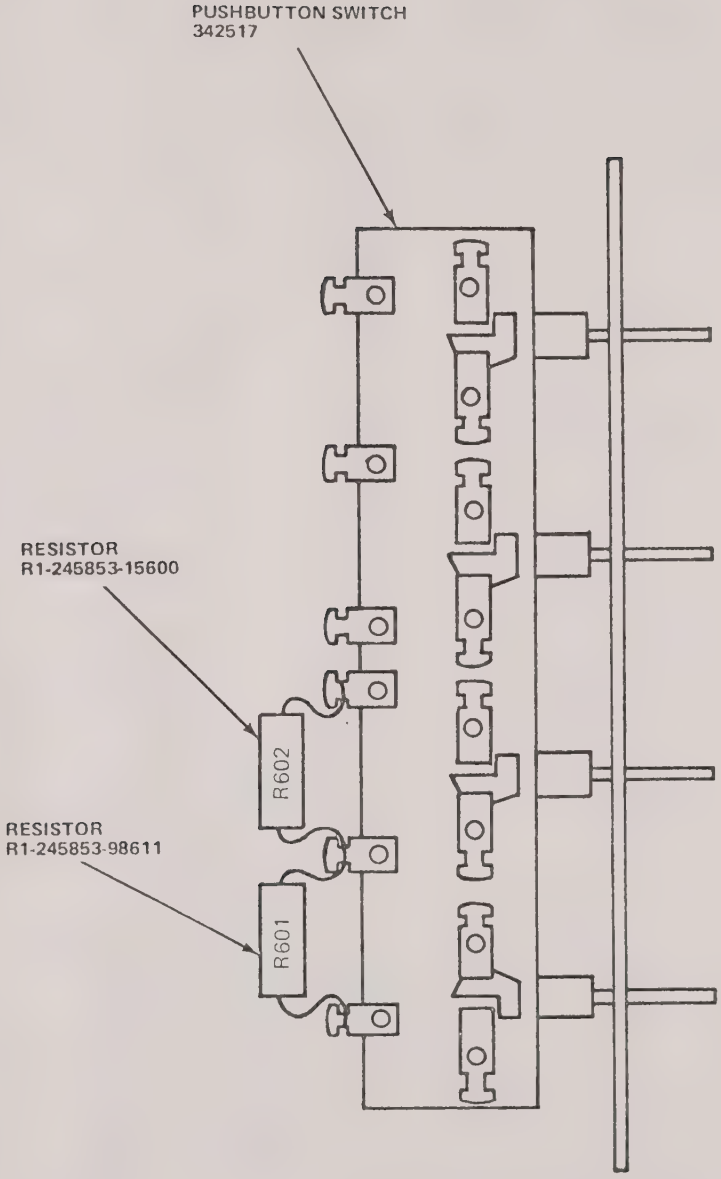

PREAMPLIFIER 13-4185-05
EXTERNAL FUNCTION SWITCH ASM 765706 (S-601)

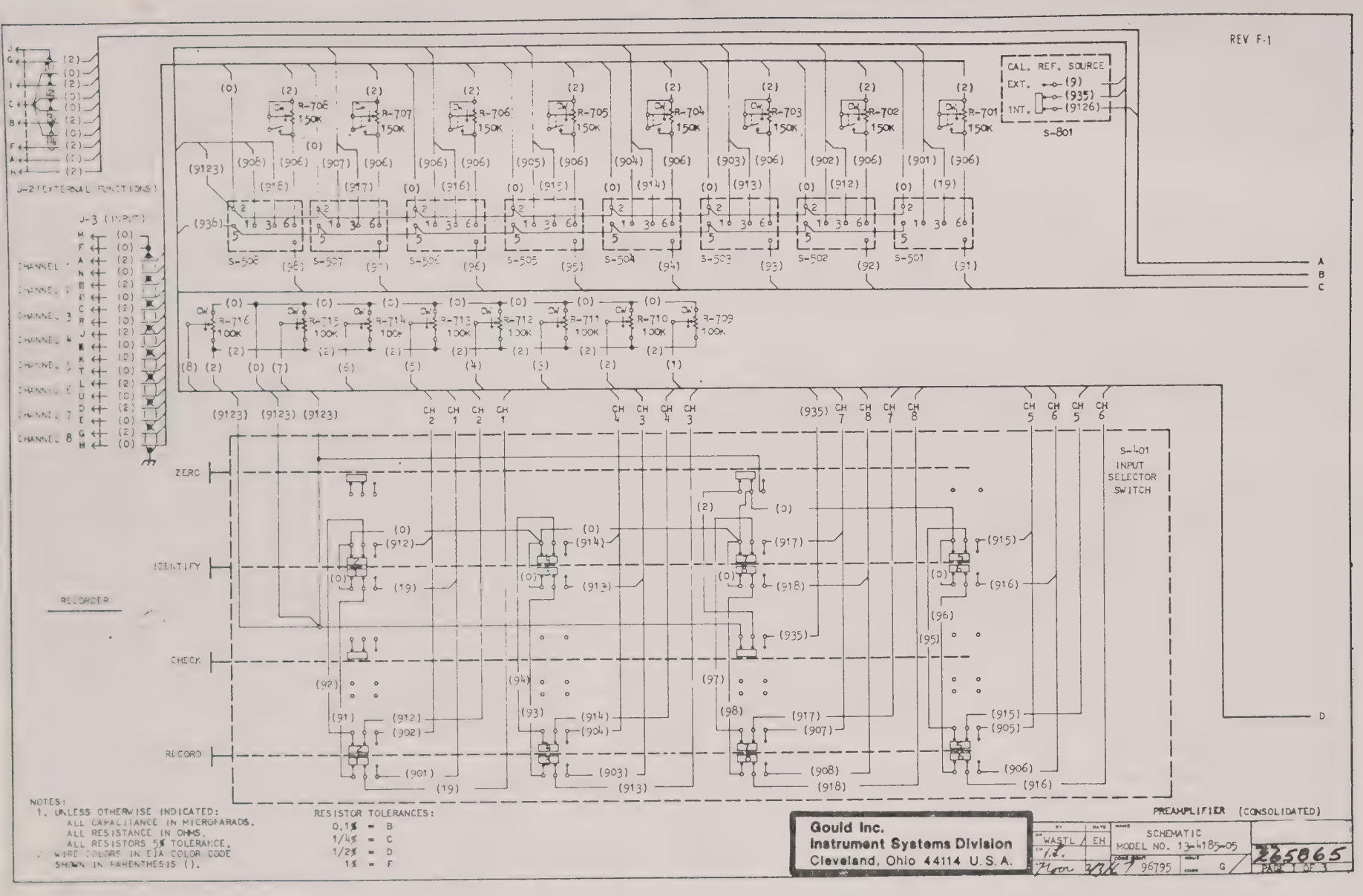

NOTES:
1. UNLESS OTHERWISE INDICATED:
   ALL CAPACITANCE IN MICROFARADS.
   ALL RESISTANCE IN OHMS.
   ALL RESISTORS 5% TOLERANCE.
2. WIRE COLORS IN EIA COLOR CODE SHOWN IN PARENTHESIS ().

RESISTOR TOLERANCES:
0.1% = B
1/4% = C
1/2% = D
1% = F

PREAMPLIFIER (CONSOLIDATED)

Gould Inc.
Instrument Systems Division
Cleveland, Ohio 44114 U.S.A.

BY WASTL	DATE EH	NAME SCHEMATIC MODEL NO. 13-4185-05	265865
CH. I.L.		CODE IDENT 96795	CODE G
APPR. Moor	2/3/67		PAGE 1 OF 3

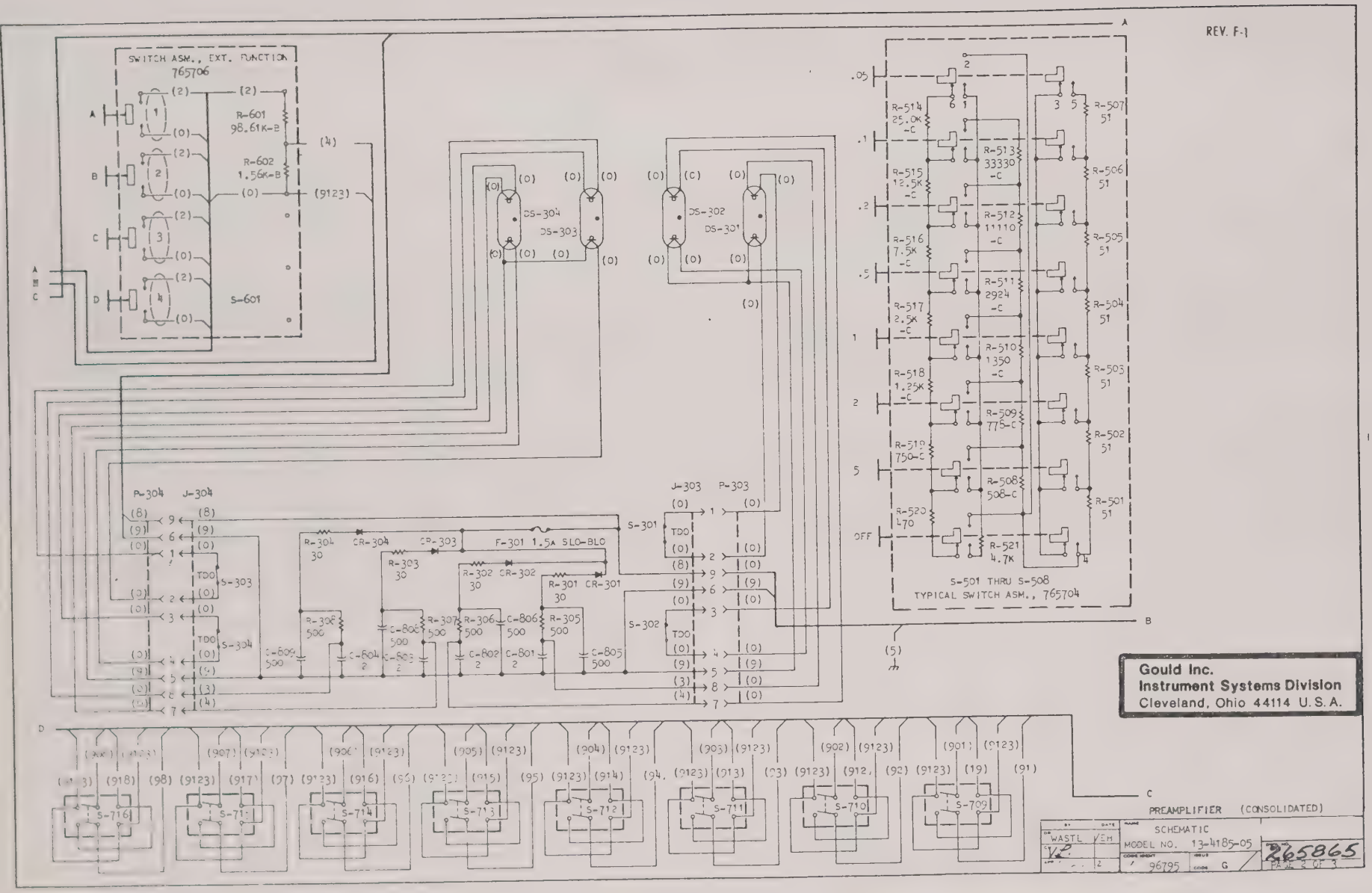
REV. F-1
SWITCH ASM., EXT. FUNCTION
765706
R-601
98.61K-B
R-602
1.56K-B
S-601
DS-304
DS-303
DS-302
DS-301
S-501 THRU S-508
TYPICAL SWITCH ASM., 765704
R-514
25.0K
-C
R-515
12.5K
-C
R-516
7.5K
-C
R-517
2.5K
-C
R-518
1.25K
-C
R-519
750-C
R-520
470
R-513
33330
-C
R-512
11110
-C
R-511
2924
-C
R-510
1350
-C
R-509
775-C
R-508
508-C
R-521
4.7K
R-507
51
R-506
51
R-505
51
R-504
51
R-503
51
R-502
51
R-501
51
P-304
J-304
J-303
P-303
S-303
S-304
S-301
S-302
TDO
R-304
30
R-303
30
R-302
30
R-301
30
CR-304
CR-303
CR-302
CR-301
F-301 1.5A SLO-BLO
R-308
500
R-307
500
R-306
500
R-305
500
C-809
500
C-808
500
C-807
500
C-806
500
C-805
500
C-804
2
C-803
2
C-802
2
C-801
2
S-716
S-715
S-714
S-713
S-712
S-711
S-710
S-709
PREAMPLIFIER (CONSOLIDATED)
SCHEMATIC
MODEL NO. 13-4185-05
265865
96795
Gould Inc.
Instrument Systems Division
Cleveland, Ohio 44114 U.S.A.

REV. F-1

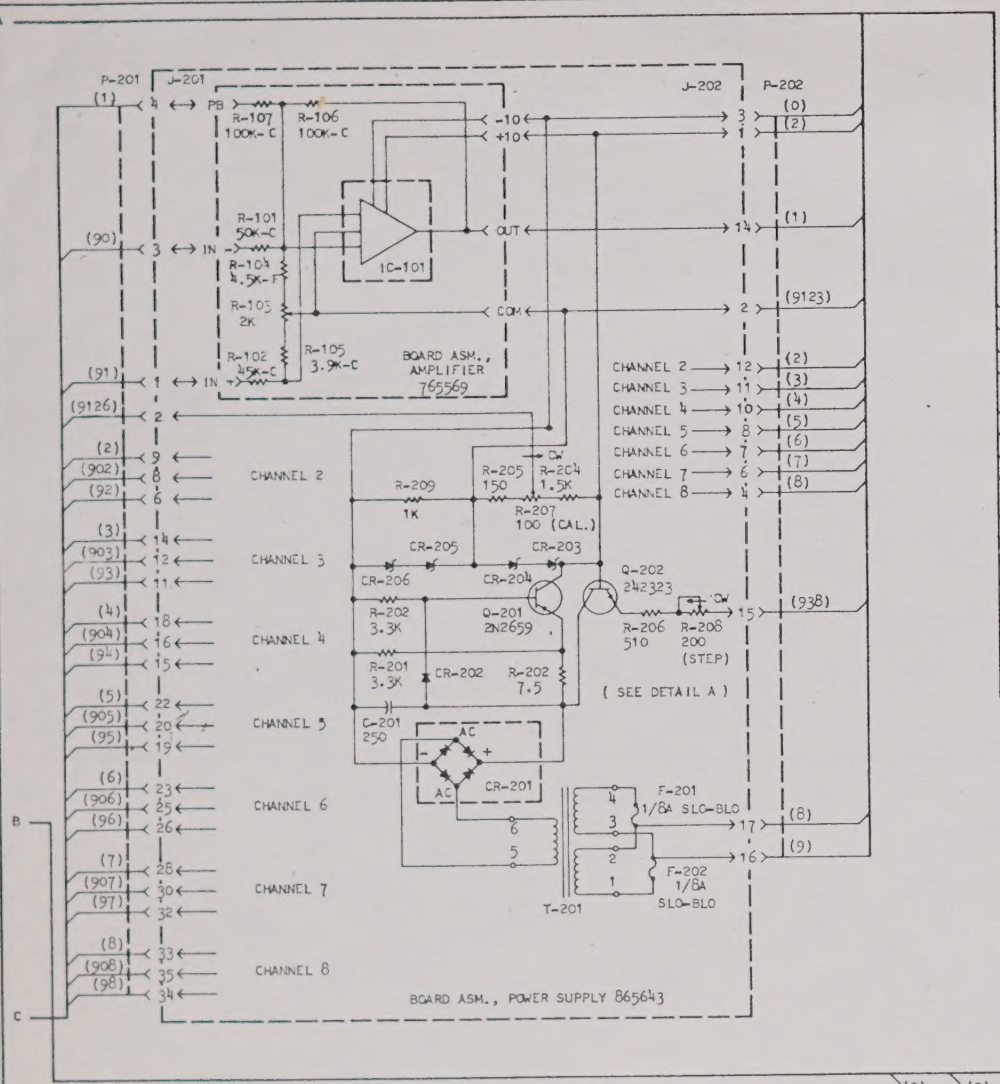

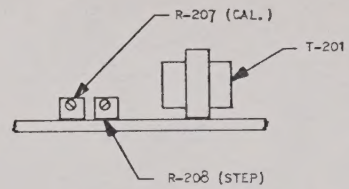

DETAIL A (LOCATION OF R-207 & R-208)

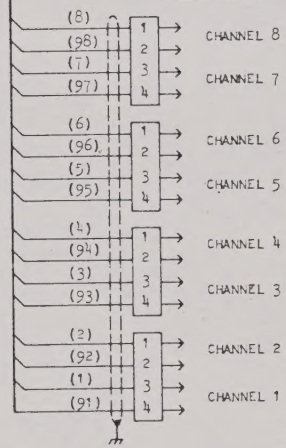

TABLE OF CONTROL SYMBOLS

CHANNEL	SENSITIVITY	ATTENUATOR	PEN BIAS	POLARITY
1	R-701	S-501	R-709	S-709
2	R-702	S-502	R-710	S-710
3	R-703	S-503	R-711	S-711
4	R-704	S-504	R-712	S-712
5	R-705	S-505	R-713	S-713
6	R-706	S-506	R-714	S-714
7	R-707	S-507	R-715	S-715
8	R-708	S-508	R-716	S-716

PREAMPLIFIER (CONSOLIDATED)

Gould Inc.
Instrument Systems Division
Cleveland, Ohio 44114 U.S.A.

WASTL / EH	SCHEMATIC MODEL NO. 13-4185-05		265865
	96795	G	PAGE 3 OF 3

www.manualsplus.com
1025746

Gould Inc., Recording Systems Division
3631 Perkins Avenue, Cleveland Ohio 44114
Telephone (216) 361-3315

GOULD
Electronics